CATALOGUE

EDITION 14

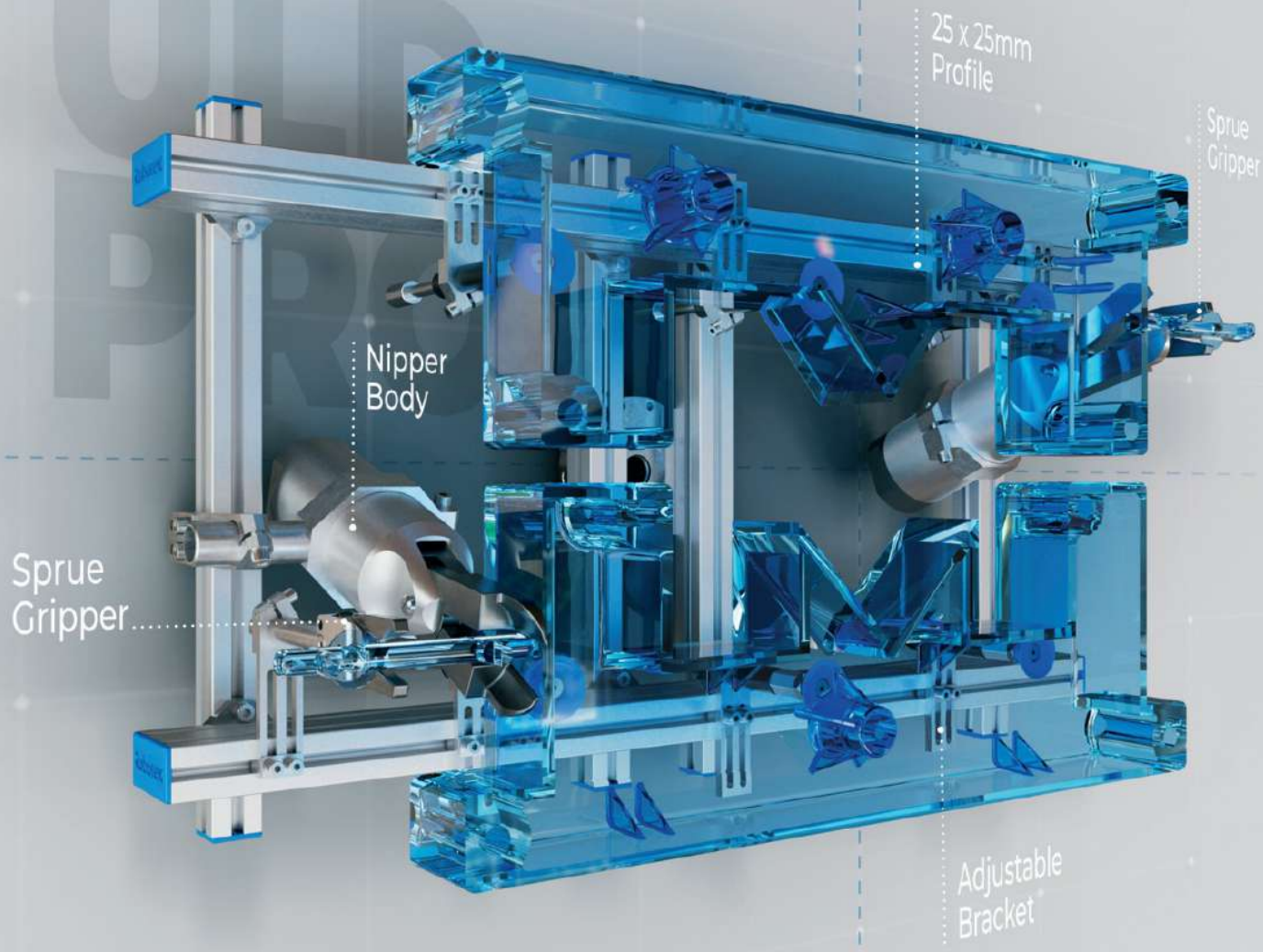

MOULDPRO

FUN
STRONG
EXCELLENCE
RESPONSIBLE
PASSION
EFFECTIVE
FLEXIBLE
BRAVE
CARING
PARTNERSHIP
PASSION
POSITIVE
PROGRESSIVE
PEOPLE
TRUSTED
BRAVE
STRONG
ADAPTABLE
SUSTAINABLE
PEOPLE
BEST
FUN
BRAVE
VALUE
FLEXIBLE
GLOBAL
PASSION
DYNAMIC
TRANSPARENT
AUTHENTIC
BEST
BRAVE
INTEGRITY
CREATIVE
TRUSTED
PASSION
FORWARD THINKING
TRUSTED
EFFECTIVE
EXPERIENCE
COMMITTED
PASSION
RESOURCES
DYNAMIC
SUCCESSFUL
FORWARD THINKING
APPROACHABLE
REPUTATION
PROACTIVE
PEOPLE
VALUE
EFFECTIVE
FUN
BEST
PASSION
FOCUSED
ADAPTABLE
CREATIVE
TRUSTED
FUN
POSITIVE
AUTHENTIC
CARING
PEOPLE
NETWORK
BRAVE
PROGRESSIVE
FUN
PASSION
PEOPLE
FOCUSED
FLEXIBLE
PROACTIVE
INTEGRITY
BEST
FORWARD THINKING
CREATIVE
BEST
FUN

MOULDPRO

EDITION 14

NEW ENTRIES

NEW

OEM European IMM Nozzle Tips

Complete stock available.

285

NEW

Grippers

Extended range.

223

NEW

Mounting Clamps

Extended range.

188

NEW

Digital Hot Runner Controllers

6 and 12 zones.

125

NEW

Push Lock Fittings

Extended range and sizes.

61

NEW

Suction Cup Adaptors

Extended range.

212

NEW

White Mould Lubricant

New general purpose grease.

118

NEW

Mould Cycle Counter

High temperature counters.

358

NEW

New Hose Sizes

Push-lok/Silicone.

45

NEW

Flosense 1.0

Dual circuit option.

86

MOULDING SUPPLIES
CONTENTS

5 01. MOULD COOLING

84 02. THERMAL MANAGEMENT

108 03. CONSUMABLES

124 04. TEMPERATURE CONTROL

152 05. MATERIAL HANDLING

164 06. END OF ARM TOOLING (EOAT)

284 07. END OF BARREL

292 08. TOOLS & ACCESSORIES

314 09. MACHINE ACCESSORIES

324 10. MOULD CLAMPING

332 11. LIFTING

340 12. MOULD COMPONENTS

MOULD COOLING

01.

6 COUPLERS

45 HOSES

52 HOSE PROTECTION

54 HOSE CUTTING

55 HOSE ASSEMBLY TOOL

56 HOSE CLAMPING

58 FITTINGS

71 VALVES

76 PUSH IN FITTINGS

78 MANIFOLDS

82 SEALANT & TAPE

MOULD COOLING

01.

8
INTERNATIONAL SERIES 20 / 30 / 50

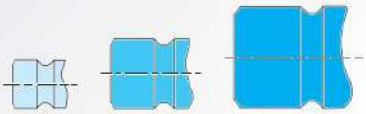

18
EUROPEAN SERIES 09 / 13 / 19

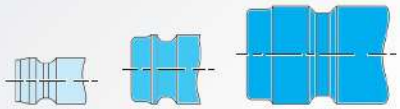

30
FRENCH SERIES 08 / 12

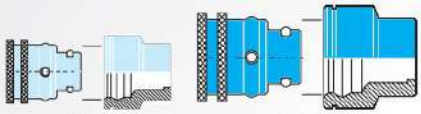

36
FRENCH MATIC SERIES 6 / 9 / 12 / 16 / 25

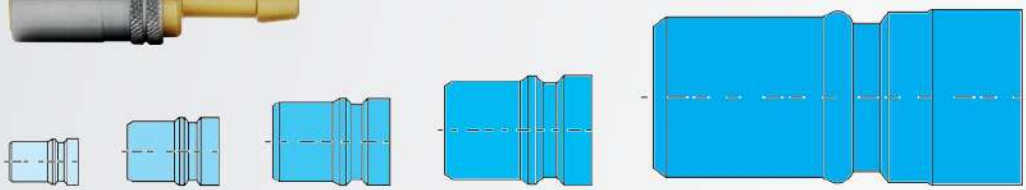

42
LARGE FLOW COUPLINGS 75 / 85 / 96 / 105

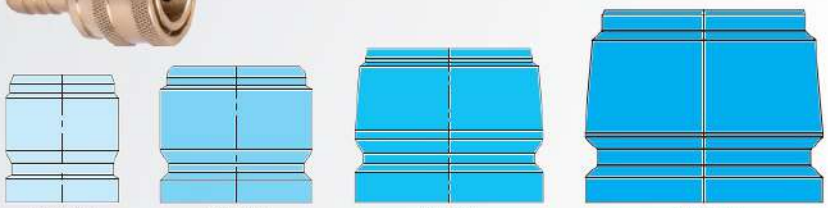

45
MULTI COUPLINGS SERIES

MOULDPRO
SAFETY COUPLING TYPE TS

The patented quick connect safety coupling features an automatic locking mechanism that offers an effective solution for accidental disconnection and unlocking.

The coupling is designed for use with aggressive media such as mould cooling applications with hot and cold water (as well as thermal oil) between -20°C and +200°C*.

High quality FKM o-rings mean that the coupling is ideal for mould cooling circuits especially for high temperature.

The couplings are available in both European and International series making it fully compatible with existing moulds; it is not necessary to change the connector nipples.

* water up to 160° C oil up to 200°C

Coupling in unlocked position, sleeve is in default position ready to connect

Coupling in locked position, and green code indicates that the coupling is locked and safe

The Mouldpro quick connect safety coupling system is characterized by its simple and intuitive connection process.

Even in difficult and hidden areas, this enables a safe operation. The connection takes place via automatic locking.

An additional colour coding on the locking sleeve indicates a correct and secure connection clearly and unequivocally.

The disconnecting process can be blindly executed due to the forced guidance of the locking sleeve – it requires an axial movement of turning the locking sleeve, basically a manual unlocking motion.

An accidental or unintentional disconnection is practically impossible.

1. Strengthened release sleeve made of high resistant special brass
2. Separate O-ring sealing on the connector
3. Special-Hitec-FKM-O-ring
4. Forced guidance design with visual colour coding on the locking sleeve
5. Patented automatic safety locking mechanism (dependable security when disconnecting)

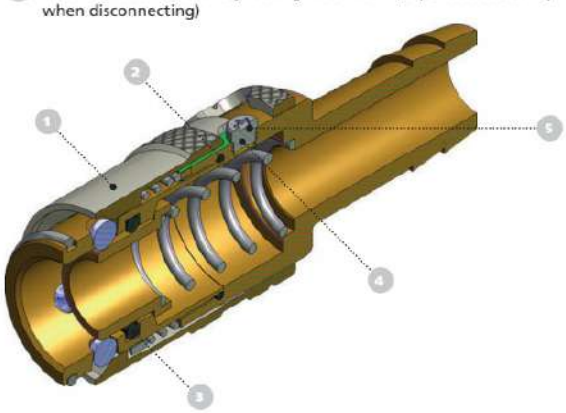

Nominal Diameter

20 / 30 / 50

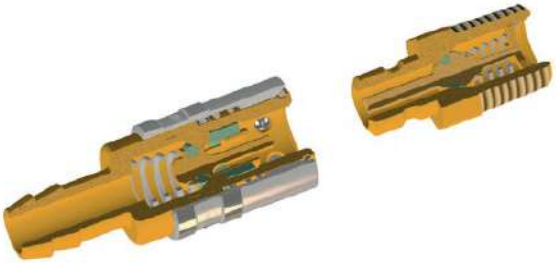

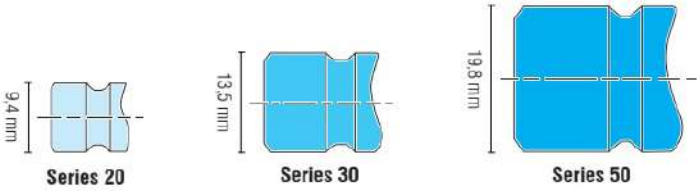

Illustration scale 1:1

Technical Description

Coupling series especially developed for connecting coolant lines on injection moulds.

Fully interchangeable with other brands with the same plug profiles.

All dimensions and tolerances according to original specs.

Chart

Serie 20

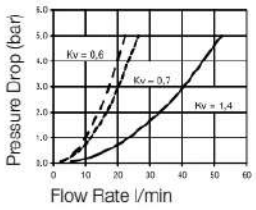

-------- Double valve
- - - - - Single valve
——— Non valved

Serie 30

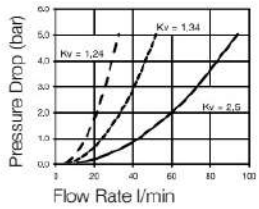

-------- Double valve
- - - - - Single valve
——— Non valved

Serie 50

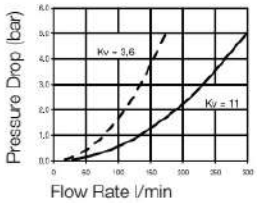

-------- Double valve
- - - - - Single valve
——— Non valved

Material

Coupling	
Back Body	Brass
Valve Body	Brass
Sleeve	Brass (without Valve)
Sleeve	Brass, Nickel Plated (with Valve)
Valve	Brass
Locking Balls	AISI 420
Spring	AISI 301
Seal	FKM

Plug	
Plug Profile	Brass
Back Body	Brass
Valve	Brass
Spring	AISI 301
Seal	FKM

Working Pressure

15 bar, maximum static working pressure with safety factor of 4 to 1.

Working Temperature

Standard Couplers
Water up to 140°C
Oil up to 180°C

TS Couplers
Water up to 160°C
Oil up to 200°C

Straight Coupling

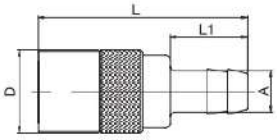

DN	Series			A	D	L	L1	
4,5	20	20K6V	20K6	6	18	46	17	10
6		20K10V	20K10	10	18	51	22	10
		20K13V	20K13	13	18	51	22	10
7	30	30K10V	30K10	10	24	64	22	10
9		30K13V	30K13	13	24	66,5	25	10
15	50	50K19V	50K19	19	32	89	32	5

Safety Coupling, Type TS, Straight

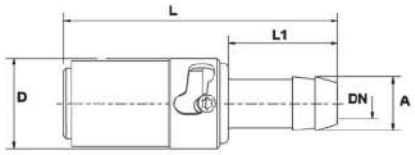

DN	Serie			A	D	L	L1	
6	20	20K10V-TS	20K10-TS	10	18	59,5	22	5
7	30	30K10V-TS	30K10-TS	10	23	64,5	25	5
9		30K13V-TS	30K13-TS	13	23	64,5	25	5
15	50	50K19V-TS	50K19-TS	19	32	90,8	34	1

Push Lock - Straight Coupling

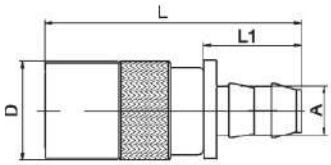

DN	Series			A	D	L	L1	
6	20	20K10V-PL	20K10-PL	10	18	58	28	10
9	30	30K10V-PL	30K10-PL	10	24	64,5	28	10
		30K13V-PL	30K13-PL	13	24	64,5	28	10
15	50		50K19-PL	19	32	89	38	5

90° Coupling

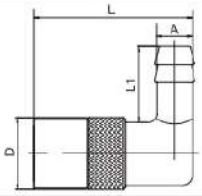

DN	Series			A	D	L	L1	
4,5	20	20K6V/90	20K6/90	6	18	40	19	10
6		20K10V/90	20K10/90	10	18	40	22	10
7	30	30K10V/90	30K10/90	10	24	56	22	10
9		30K13V/90	30K13/90	13	24	56	28,5	10
15	50	50K19V/90	50K19/90	19	32	77	32	5

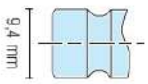

Series 20

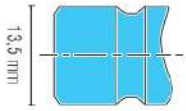

Series 30

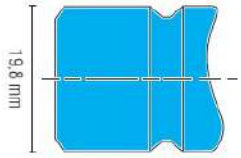

Series 50

Safety Coupling, Type TS, 90°

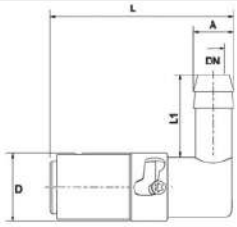

DN	Serie			A	D	L	L1	
6	20	20K10V/90-TS	20K10/90-TS	10	18	52,5	22	5
7	30	30K10V/90-TS	30K10/90-TS	10	23	68,5	25	5
9		30K13V/90-TS	30K13/90-TS	13	23	68,5	25	5
15	50	50K19V/90-TS	50K19/90-TS	19	32	80,8	34	1

Push Lock - 90°Coupling

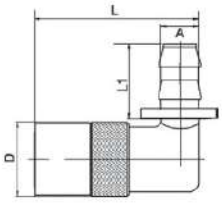

DN	Series			A	D	L	L1	
6	20	20K10V-90-PL	20K10-90-PL	10	18	40,5	28	10
7	30	30K10V-90-PL	30K10-90-PL	10	23	61,5	28	10
9		30K13V-90-PL	30K13-90-PL	13	23	61,5	28	10
15	50		50K19-90-PL	19	32	87	38	5

45° Coupling

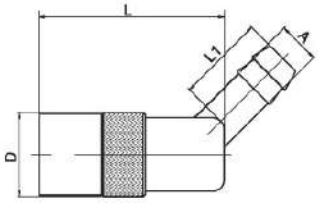

DN	Series			A	D	L	L1	
4,5	20	20K6V/45	20K6/45	6	18	55,5	19	10
6		20K10V/45	20K10/45	10	18	55,5	22	10
7	30	30K10V/45	30K10/45	10	24	71	22	10
9		30K13V/45	30K13/45	13	24	75	25	10
15	50	50K19V/45	50K19/45	19	32	77	30	5

Safety Coupling, Type TS, 45°

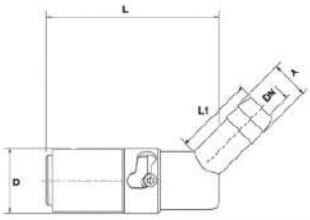

DN	Serie			A	D	L	L1	
6	20	20K10V/45-TS	20K10/45-TS	10	18	52,5	22	5
7	30	30K10V/45-TS	30K10/45-TS	10	23	68,5	25	5
9		30K13V/45-TS	30K13/45-TS	13	23	68,5	25	5
15	50	50K19V/45-TS	50K19/45-TS	19	32	80,8	34	1

See explanation of symbols on page 360

Push Lock - 45° Coupling

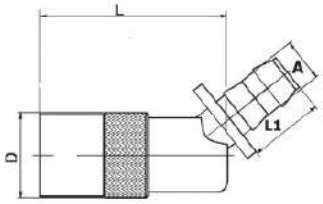

DN	Series			A	D	L	L1	
6	20	20K10V-45-PL	20K10-45-PL	10	18	40,5	28	10
7	30	30K10V-45-PL	30K10-45-PL	10	23	61,5	28	10
9		30K13V-45-PL	30K13-45-PL	13	23	61,5	28	10
15	50		50K19-45-PL	19	32	87	38	5

Male Threaded Coupling

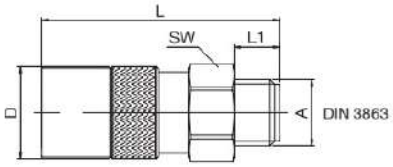

DN	Series			A	D	L	L1	SW	
6	20	20KUR1/4V	20KUR1/4	G1/4	18	38	9	17	10
		20KUR3/8V	20KUR3/8	G3/8	18	38	9	19	10
9	30	30KUR1/4V	30KUR1/4	G1/4	24	48,5	9	22	10
		30KUR3/8V	30KUR3/8	G3/8	24	48,5	9	22	10
		30KUR1/2V	30KUR1/2	G1/2	24	51,5	12	22	10
15	50	50KUR1/2V	50KUR1/2	G1/2	32	73	12	30	10
		50KUR3/4V	50KUR3/4	G3/4	32	77	16	30	5

Safety Coupling, Type TS, Male Threaded

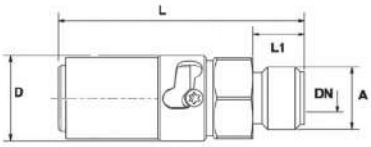

DN	Serie			A	D	L	L1	
6	20	20KUR1/4V-TS	20KUR1/4-TS	G1/4	18	55,5	11	5
		20KUR3/8V-TS	20KUR3/8-TS	G3/8	18	55,5	11	5
9	30	30KUR1/4V-TS	30KUR1/4-TS	G1/4	23	57,5	12,5	5
		30KUR3/8V-TS	30KUR3/8-TS	G3/8	23	57,5	12,5	5
		30KUR1/2V-TS	30KUR1/2-TS	G1/2	23	57,5	12,5	5
15	50	50KUR1/2V-TS	50KUR1/2-TS	G1/2	32	75,8	15	1
		50KUR3/4V-TS	50KUR3/4-TS	G3/4	32	76,8	16	1

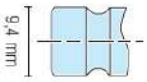

Series 20

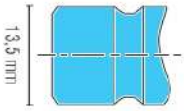

Series 30

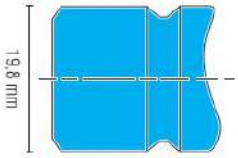

Series 50

Female Threaded Coupling

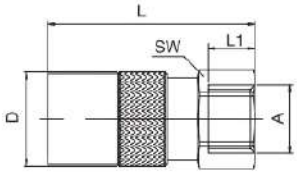

DN	Series			A	D	L	L1	SW	
6	20	20KIR1/8V	20KIR1/8	G1/8	18	40	10	17	10
		20KIR1/4V	20KIR1/4	G1/4	18	40	10	17	10
		20KIR3/8V	20KIR3/8	G3/8	18	44	10	19	10
9	30	30KIR1/4V	30KIR1/4	G1/4	24	51,5	10	21	10
		30KIR3/8V	30KIR3/8	G3/8	24	51,5	10	21	10

Banjo Bridge

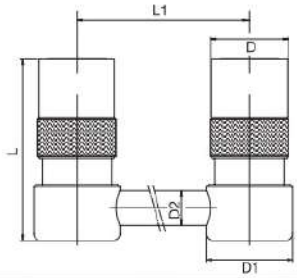

DN	Series		A	D	L	D1	D2	L1	
6	20	20K125		18	42	20	8	125	1
		20K250		18	42	20	8	250	1
		20K500		18	42	20	8	500	1
9	30	30K125		24	58	26	10	125	1
		30K250		24	58	26	10	250	1
		30K500		24	58	26	10	500	1
15	50	50K160		32	78	36	14	160	1
		50K315		32	78	36	14	315	1
		50K500		32	78	36	14	500	1

Coupling with Plug

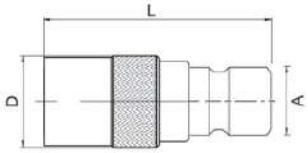

DN	Series			A	D	L	
6	20	20K30NV	20K30N	13,5	18	50,5	10
9	30	30K20NV	30K20N	9,4	24	52,5	10

Blind Coupling

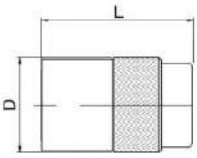

DN	Series		D	L	
6	20	20K	18	30	10
9	30	30K	24	37	10

See explanation of symbols on page 360

Male Plug

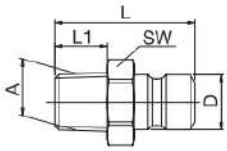

DN	Series			A	D	L	L1	SW	
6	20		20NM10	M10x1	9,4	23	8	13	25
			20NR1/8	R1/8	9,4	24	9	13	25
			20NR1/4	R1/4	9,4	29	12	16	25
		20NR1/4V		R1/4	9,4	29	14	16	25
			20NR3/8	R3/8	9,4	30	12	19	25
9	30		30NR1/8	R1/8	13,5	29,5	20,5	14	25
		30NR1/4V	30NR1/4	R1/4	13,5	34	12	16	25
		30NR3/8V	30NR3/8	R3/8	13,5	34	12	19	25
			30NR1/2	R1/2	13,5	39	17	24	10
15	50		50NR1/2	R1/2	19,8	44	17	22	10
			50NR3/4	R3/4	19,8	45	19	29	10

Male Plug - with Internal Hex

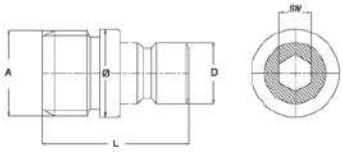

DN	Series		A	D	L	Ø	SW	
6	20	20NSWR1/8	G1/8	9,4	20,7	13	5	10
		20NSWR1/4	G1/4	9,4	22,7	13,5	5	10
9	30	30NSWR1/4	G1/4	13,5	30	15	8	10
		30NSWR3/8	G3/8	13,5	30	19	8	10

Adjustable Plug

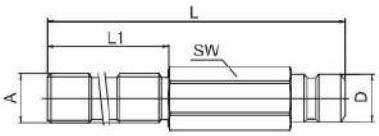

DN	Series		A	D	L	L1	SW	
6	20	20NR1/8/100	G1/8	9,4	100	60	11	10
		20NR1/4/100	G1/4	9,4	100	60	14	10
9	30	30NR1/4/100	G1/4	13,5	100	60	14	10
		30NR3/8/100	G3/8	13,5	100	60	17	10

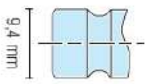

Series 20

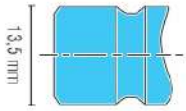

Series 30

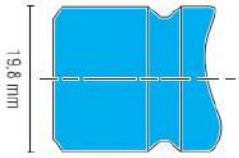

Series 50

Extended Plug

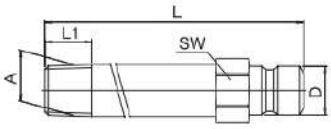

DN	Series	↔	A	D	L	L1	SW	
6	20	20N50	R1/8	9,4	50	9	11	10
		20N50-1/4	R1/4	9,4	50	12	14	10
		20N100	R1/8	9,4	100	9	11	10
		20N100-1/4	R1/4	9,4	100	12	14	10
		20N150	R1/8	9,4	150	9	11	10
		20N150-1/4	R1/4	9,4	150	12	14	10
		20N200	R1/8	9,4	200	9	11	10
		20N200-1/4	R1/4	9,4	200	12	14	10
		20N250	R1/8	9,4	250	9	11	10
		20N250-1/4	R1/4	9,4	250	12	14	10
9	30	30N50	R1/4	13,5	50	12	15	10
		30N100	R1/4	13,5	100	12	15	10
		30N150	R1/4	13,5	150	12	15	10
		30N200	R1/4	13,5	200	12	15	10
		30N250	R1/4	13,5	250	12	15	10

90° Male Plug

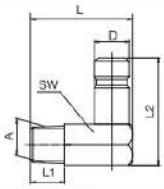

DN	Series	↔	A	D	L	L1	L2	SW	
6	20	20NM10/90	M10x1	9,4	27	9	28,5	11	25
		20NR1/8/90	R1/8	9,4	27	9	28,5	11	25
		20NR1/4/90	R1/4	9,4	27	9	28,5	11	25
9	30	30NR1/4/90	R1/4	13,5	34	9	32	15	25
		30NR3/8/90	R3/8	13,5	34	9	32	15	25

Push Lock - Hosetail Plug

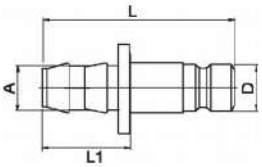

DN	Series	↔	A	D	L	L1	
6	20	20N10-PL	10	9,4	44	28	10
7	30	30N10-PL	10	13,5	44	28	10
9		30N13-PL	13	13,5	44	28	10
15	50	50N19-PL	19	19,8	65	36	5

See explanation of symbols on page 360

Hosetail Plug

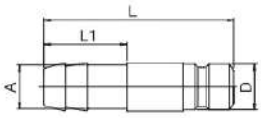

DN	Series	↔	A	D	L	L1	
6	20	20N10	10	9,4	39	22	25
		20N13	13	9,4	39	22	25
7	30	30N10	10	13,4	41	25	25
9		30N13	13	13,4	41	25	25
15	50	50N19	19	13,4	41	25	10

Female Plug

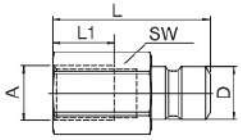

DN	Series	↔	A	D	L	L1	SW	
6	20	20NR1/8I	G1/8	9,4	28	11	13	25
		20NR1/4I	G1/4	9,4	32	13	16	25
		20NR3/8I	G3/8	9,4	34	13	19	25
9	30	30NR1/4I	G1/4	13,5	37	13	16	25
		30NR3/8I	G3/8	13,5	39	13	19	25

Double Plug

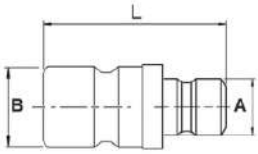

DN	A Series	B Series	↔	L	
6	20	20	2020DB	31	10
		30	2030DB	31	10
9	30		3030DB	34	10

Replacement Seals FKM

S	Series	Part No.	
6	20	200V	10
9	30	300V	10
16	50	500V	10

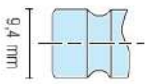

Series 20

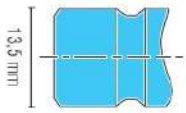

Series 30

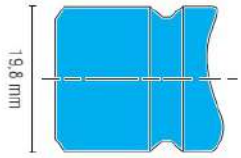

Series 50

Nominal Diameter

09 / 13 / 19

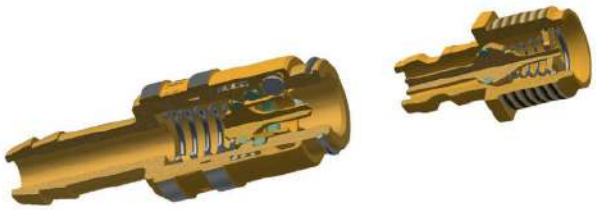

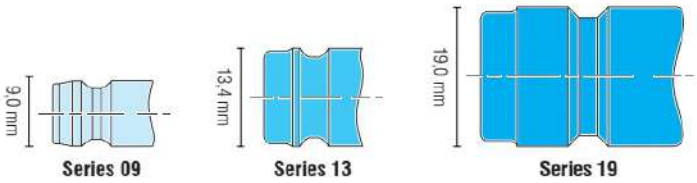

Illustration scale 1:1

Technical Description

Coupling series especially developed for connecting coolant lines on injection moulds.

Fully interchangeable with other brands with the same plug profiles.

All dimensions and tolerances according to original specs.

Chart

Serie 09

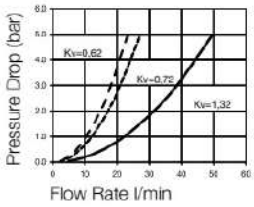

Double valve
Single valve
Non valved

Serie 13

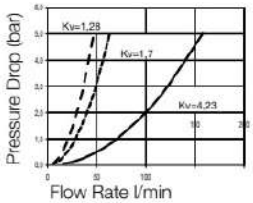

Double valve
Single valve
Non valved

Serie 20

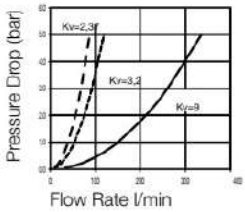

Double valve
Single valve
Non valved

Material

Coupling

Back Body	Brass
Valve Body	Brass
Sleeve	Brass (with valve)
Sleeve	Brass, Nickel Plated (without valve)
Valve	Brass
Locking balls	AISI 420
Spring	AISI 301
Seal	FKM

Plug

Plug Profile	Brass
Back Body	Brass
Valve	Brass
Spring	AISI 301
Seal	FKM

Working Pressure

15 bar, maximum static working pressure with safety factor of 4 to 1.

Working Temperature

Standard Couplers
Water up to 140°C
Oil up to 180°C

TS Couplers
Water up to 160°C
Oil up to 200°C

Straight Coupling

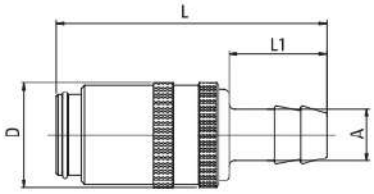

DN	Series			A	D	L	L1	
6	09	09K10V	09K10	10	18	52	22	10
		09K13V	09K13	13	18	52	22	10
7	13	13K10V	13K10	10	23	61,5	25	10
9		13K13V	13K13	13	23	61,5	25	10
13	19	19K19V	19K19	19	32	90	32	5

Safety Coupling, Type TS, Straight

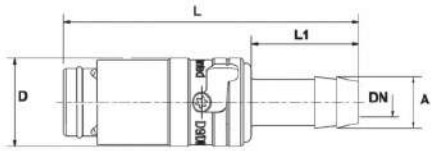

DN	Serie			A	D	L	L1	
6	09	09K10V-TS	09K10-TS	10	18	59,5	22	5
9	13	13K13V-TS	13K13-TS	13	23	63	25	5
13	19	19K19V-TS	19K19-TS	19	32	91	34	5

Push Lock - Straight Coupling

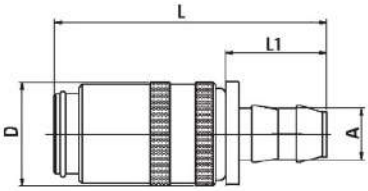

DN	Series			A	D	L	L1	
6	09	09K10V-PL	09K10-PL	10	18	58,5	28	10
9	13	13K13V-PL	13K13-PL	13	23	64,5	28	10
13	19		19K19-PL	19	32	97	38	5

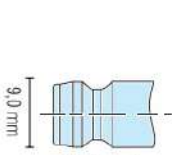

Series 09

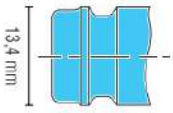

Series 13

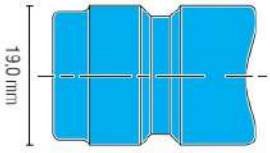

Series 19

90° Coupling

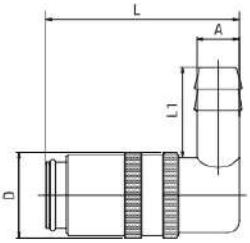

DN	Series			A	D	L	L1	
6	09	09K10V-90	09K10-90	10	18	41	22	10
7	13	13K10V-90	13K10-90	10	23	51	28,5	10
9		13K13V-90	13K13-90	13	23	51	28,5	10
13	19	19K19V-90	19K19-90	19	32	78	32	5

Safety Coupling, Type TS, 90°

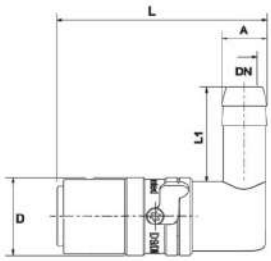

DN	Serie			A	D	L	L1	
6	09	09K10V/90-TS	09K10/90-TS	10	18	52,5	22	5
9	13	13K13V/90-TS	13K13/90-TS	13	23	68,5	25	5
13	19	19K19V/90-TS	19K19/90-TS	19	32	81	34	1

Push Lock - 90° Coupling

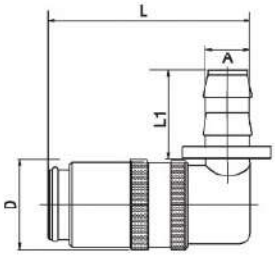

DN	Series			A	D	L	L1	
6	09	09K10V-90-PL	09K10-90-PL	10	18	42,5	28	10
9	13	13K13V-90-PL	13K13-90-PL	13	23	51	28	10
13	19		19K19-90-PL	19	32	76,5	38	5

See explanation of symbols on page 360

45° Coupling

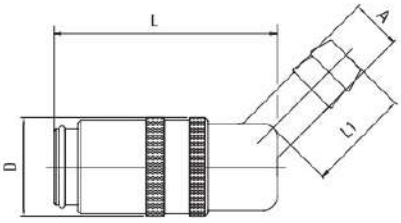

DN	Series			A	D	L	L1	
6	09	09K10V-45	09K10-45	10	18	41	22	10
7	13	13K10V-45	13K10-45	13	23	51	28,5	10
9		13K13V-45	13K13-45	13	23	51	28,5	10
13	19	19K19V-45	19K19-45	19	32	78	32	5

Safety Coupling, Type TS, 45°

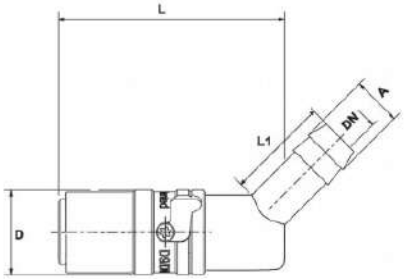

DN	Serie			A	D	L	L1	
6	09	09K10V/45-TS	09K10/45-TS	10	18	52,5	22	5
9	13	13K13V/45-TS	13K13/45-TS	13	23	68,5	25	5
13	19	19K19V/45-TS	19K19/45-TS	19	32	81	34	1

Push Lock - 45° Coupling

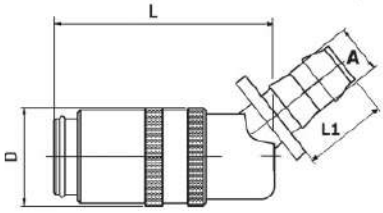

DN	Series			A	D	L	L1	
6	09	09K10V-45-PL	09K10-45-PL	10	18	42,5	28	10
9	13	13K13V-45-PL	13K13-45-PL	13	23	51	28	10
13	19		19K19-45-PL	19	32	76,5	38	5

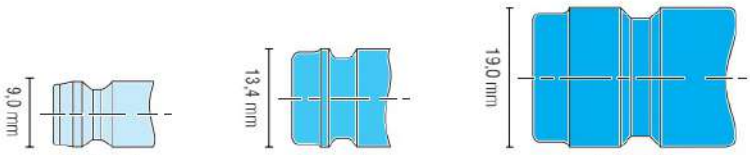

Series 09 Series 13 Series 19

Male Threaded Coupling

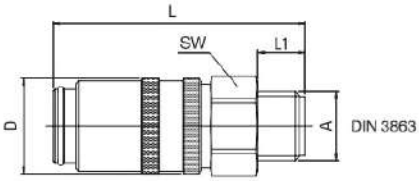

DN	Series			A	D	L	L1	SW	
6	09	09KUM14V	09KUM14	M14x1,5	18	48	9	17	10
		09KUR1/4V	09KUR1/4	G1/4	18	48	9	17	10
		09KUR3/8V	09KUR3/8	G3/8	18	48	9	19	10
9	13	13KUM16V	13KUM16	M16x1,5	23	51,5	9	22	10
		13KUR1/4V	13KUR1/4	G1/4	23	51,5	9	22	10
		13KUR3/8V	13KUR3/8	G3/8	23	51,5	9	22	10
		13KUR1/2V	13KUR1/2	G1/2	23	54,5	12	22	10
13	19	19KUR1/2V	19KUR1/2	G1/2	32	74	12	30	5
		19KUR3/4V	19KUR3/4	G3/4	32	78	16	30	5

Male Threaded Coupling, Short version

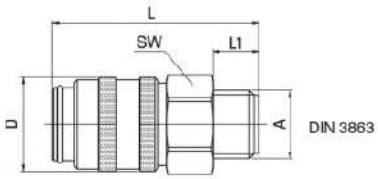

DN	Series		A	D	L	L1	SW	
6	09	09KSR1/4	G 1/4	18	38	9	17	10
9	13	13KSR3/8	G 3/8	24	38	9	22	10

Safety Coupling, Type TS, Male Threaded

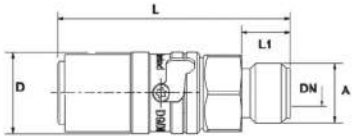

DN	Serie			A	D	L	L1	
6	09	09KUM14V-TS	09KUM14-TS	M14X1,5	18	55,5	11	5
		09KUR1/4V-TS	09KUR1/4-TS	G1/4	18	55,5	11	5
		09KUR3/8V-TS	09KUR3/8-TS	G3/8	18	55,5	11	5
9	13	13KUM16V-TS	13KUM16-TS	M16X1,5	23	57,5	12,5	5
		13KUR1/4V-TS	13KUR1/4-TS	G1/4	23	57,5	12,5	5
		13KUR3/8V-TS	13KUR3/8-TS	G3/8	23	57,5	12,5	5
		13KUR1/2V-TS	13KUR1/2-TS	G1/2	23	57,5	12,5	5
13	19	19KUR1/2V-TS	19KUR1/2-TS	G1/2	32	77	16	1
		19KUR3/4V-TS	19KUR3/4-TS	G3/4	32	77	16	1

See explanation of symbols on page 360

Female Threaded Coupling

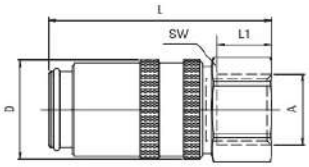

DN	Series			A	D	L	L1	SW	
6	09	09KIR1/4V	09KIR1/4	G1/4	18	41	10	17	10
		09KIR3/8V	09KIR3/8	G3/8	18	45	10	19	10
9	13	13KIR1/4V	13KIR1/4	G1/4	23	46,5	10	21	10
		13KIR3/8V	13KIR3/8	G3/8	23	46,5	10	21	10
		13KIM16V	13KIM16	M16x1,5	23	46,5	10	21	10

90° Male Threaded Coupling

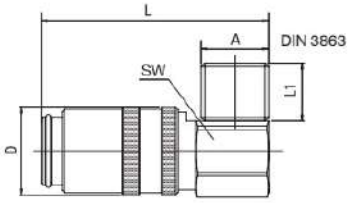

DN	Series			A	D	L	L1	SW	
6	09	09KM14/90V	09KM14/90	M14x1,5	18	47	12	17	10
		09KR1/4/90V	09KR1/4/90	G1/4	18	47	12	17	10
9	13	13KUM16/90V	13KM16/90	M16x1,5	23	53,5	12	22	10

45° Male Threaded Coupling

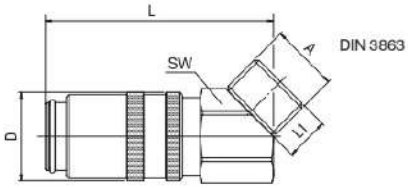

DN	Series			A	D	L	L1	SW	
6	09	09KM14/45V	09KM14/45	M14x1,5	18	47	9	17	10
		09KR1/4/45V	09KR1/4/45	G1/4	18	47	9	17	10
9	13	13KUM16/45V	13KUM16/45	M16x1,5	23	53,5	9	22	10

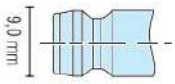

Series 09

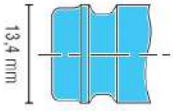

Series 13

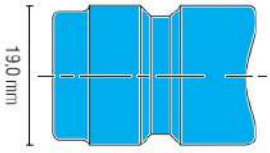

Series 19

EUROPEAN SERIES

Banjo Bridge

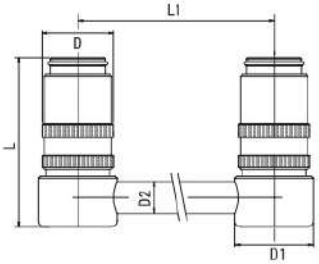

DN	Series	↔	D	L	D1	D2	L1	
6	09	09K125	18	43	20	8	125	1
		09K250	18	43	20	8	250	1
		09K500	18	43	20	8	500	1
9	13	13K125	23	53	26	10	125	1
		13K250	23	53	26	10	250	1
		13K500	23	53	26	10	500	1
13	19	19K160	32	80	36	14	160	1
		19K315	32	80	36	14	315	1
		19K500	32	80	36	14	500	1

Blind Coupling

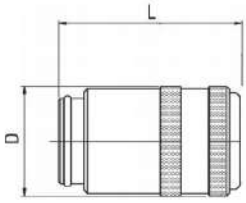

DN	Series	↔	D	L	
6	09	09K	18	30	10
9	13	13K	24	37	10

Coupling with Plug

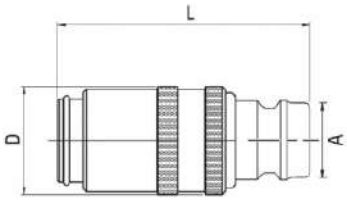

DN	Series		↔	A	D	L	
6	09	09K13NV	09K13N	13,4	18	45	10
9	13	13K9NV	13K9N	9,0	23	51	10

See explanation of symbols on page 360

Male Plug

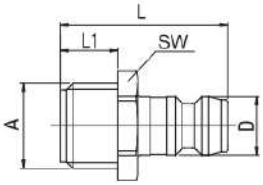

DN	Series			A	D	L	L1	SW	
6	09		09NM8	M8x0,75	9	24	7	11	25
			09NM10	M10x1	9	24	7	11	25
			09NR1/8*	G1/8	9	24	7	11	25
			09NM12	M12x1,5	9	27	10	14	25
			09NM14	M14x1,5	9	26	9	15	25
		09NM14V		M14x1,5	9	29	12	15	25
			09NR1/4*	G1/4	9	26	9	15	25
		09NR1/4V*		G1/4	9	29	12	15	25
			09NR3/8*	G3/8	9	30	10	17	25
9	13		13NR1/8*	G1/8	13,4	25	8	14	25
			13NM14	M14x1,5	13,4	26	9	15	25
			13NR1/4*	G1/4	13,4	26	9	15	25
		13NR1/4V*		G1/4	13,4	31	12	15	25
			13NR3/8*	G3/8	13,4	26	9	17	25
		13NR3/8V*		G3/8	13,4	30	12	17	25
			13NM16	M16x1,5	13,4	26	9	17	25
		13NM16V		M16x1,5	13,4	30	12	17	25
13	19	19NM24V	19NM24	M24x1,5	19	51	16	27	10
		19NR1/2V*	19NR1/2*	G1/2	19	47	12	22	10
		19NR3/4V*	19NR3/4*	G3/4	19	51	16	27	10

* Nickel Plated

Male Plug - Stainless Steel

STAINLESS STEEL

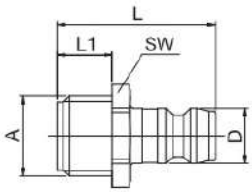

DN	Series		A	D	L	L1	SW	
6	09	09NM8SS	M8x0,75	9	24	7	11	25
		09NM10SS	M10x1	9	24	7	11	25
		09NR1/8SS	G1/8	9	24	7	11	25
		09NR1/4SS	G1/4	9	26	9	14	25
9	13	13NR1/4SS	G1/4	13,4	26	9	14	25
		13NR3/8SS	G3/8	13,4	26	9	17	25

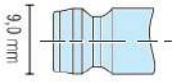

Series 09

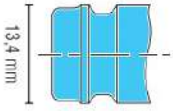

Series 13

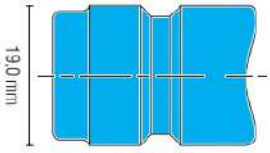

Series 19

Male Plug - with Internal Hex

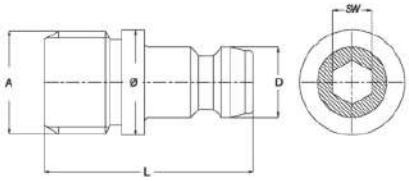

DN	Series	↔	A	D	L	Ø	SW	
6	09	09NSWM8	M8X0,75	9	24	10	5	10
		09NSWM10	M10X1	9	24	13	5	10
		09NSWR1/8	G1/8	9	24	13	5	10
		09NSWM14	M14X1,5	9	26	14,5	5	10
		09NSWR1/4	G1/4	9	27	13,5	5	10
9	13	13NSWM14	M14X1,5	13,4	26	14,5	6	10
		13NSWR1/4	G1/4	13,4	26	13,5	6	10
		13NSWR3/8	G3/8	13,4	26	17	6	10

Adjustable Plug

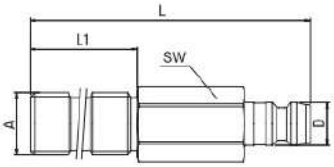

DN	Series	↔	A	D	L	L1	SW	
6	09	09NR1/8/100	G1/8	9	100	60	11	10
		09NR1/4/100	G1/4	9	100	60	14	10
9	13	13NR1/4/100	G1/4	13,4	100	60	14	10
		13NR3/8/100	G3/8	13,4	100	60	19	10

Extended Plug

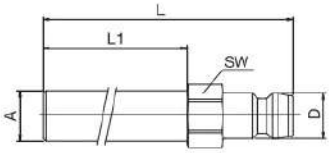

DN	Series	↔	A	D	L	L1	SW	
6	09	09N63	8	9	63	42	9	10
		09N100	8	9	100	79	9	10
		09N120	10	9	120	100	11	10
		09N240	10	9	240	220	11	10
		09N360	10	9	360	340	11	10
9	13	13N150	14	13,4	150	125	15	10
		13N300	14	13,4	300	275	15	10
		13N450	14	13,4	450	425	15	10
13	19	19N500	21	19	500	465	22	5

See explanation of symbols on page 360

Extended Plug Threaded

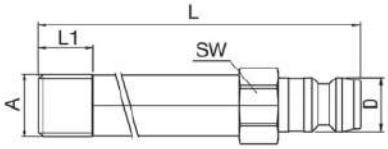

DN	Series	↔	A	D	L	L1	SW	
6	09	09NM10-60	M10X1	9	60	9	11	10
		09NM10-100	M10X1	9	100	9	11	10
		09NM10-150	M10X1	9	150	9	11	10
		09NR1/8-60	R1/8	9	60	9	11	10
		09NR1/8-100	R1/8	9	100	9	11	10
		09NR1/8-150	R1/8	9	150	12	14	10
		09NR1/4-60	R1/4	9	60	12	14	10
		09NR1/4-100	R1/4	9	100	12	14	10
		09NR1/4-150	R1/4	9	150	12	14	10
9	13	13NR1/4-60	R1/4	13,4	60	12	14	10
		13NR1/4-100	R1/4	13,4	100	12	14	10
		13NR1/4-150	R1/4	13,4	150	12	14	10

90° Male Plug

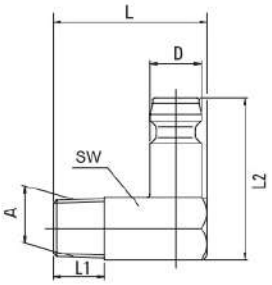

DN	Series	↔	A	D	L	L1	L2	SW	
6	09	09NM8/90	M8x0,75	9	27	9	28,5	11	25
		09NM10/90	M10x1	9	27	9	28,5	11	25
		09NR1/8/90*	R1/8	9	27	9	28,5	11	25
		09NR1/4/90*	R1/4	9	27	9	28,5	11	25
9	13	13NM14/90	M14x1,5	13,4	34	11	32	15	25
		13NR1/4/90*	R1/4	13,4	34	11	32	15	25
		13NR3/8/90*	R3/8	13,4	34	11	32	15	25
13	19	19NM24/90	M24x1,5	19	47	16	54	24	5
		19NR1/2/90*	R1/2	19	47	16	54	24	5

* Nickel Plated

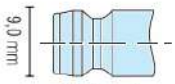

Series 09

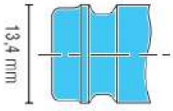

Series 13

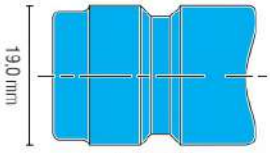

Series 19

Hosetail Plug

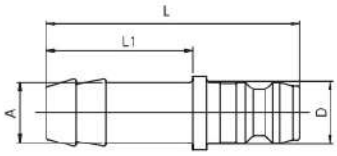

DN	Series	↔	A	D	L	L1	
6	09	09N10	10	9	38	22	25
		09N13	13	9	38	22	25
9	13	13N10	10	13,4	41	25	25
		13N13	13	13,4	41	25	25
13	19	19N13	13	19	61	32	5
		19N19	19	19	61	32	5

Push Lock - Hosetail Plug

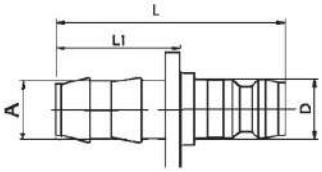

DN	Series	↔	A	D	L	L1	
6	09	09N10-PL	10	9	44	28	10
9	13	13N13-PL	13	13,4	44	28	10
13	19	19N19-PL	19	19	70	36	5

See explanation of symbols on page 360

Female Plug

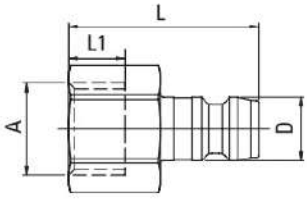

DN	Series	↔	A	D	L	L1	SW	
6	09	09NR1/8I	G1/8	9	24	7	11	25
		09NR1/4I	G1/4	9	24	7	16	25
		09NR3/8I	G3/8	9	27	10	19	25
9	13	13NR1/4I	G1/4	13,4	33	10	16	25
		13NR3/8I	G3/8	13,4	35	10	19	25

* Nickel Plated

Double Plug

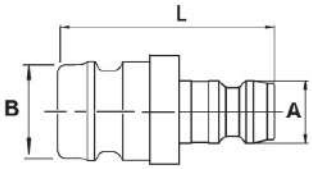

DN	A Series	B Sseries	↔	L	
6	09	09	0909DB	34	10
		13	0913DB	34	10
9	13		1313DB	34	10

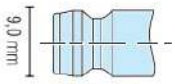

Series 09

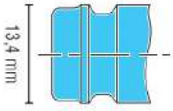

Series 13

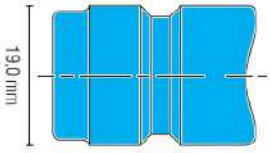

Series 19

Nominal Diameter

08 / 12

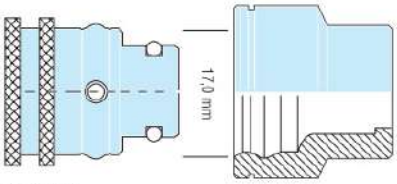

Series 08

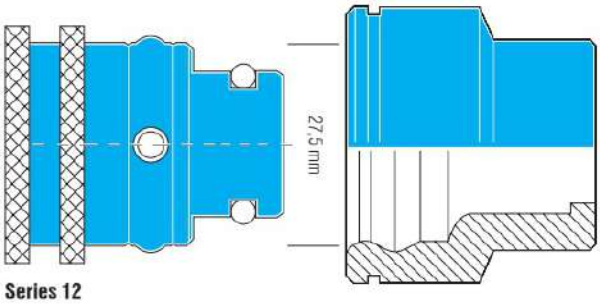

Series 12

Illustration scale 1:1

Technical Description

Coupling series especially developed for connecting coolant lines on injection moulds.

Fully interchangeable with other brands with same plug profiles.

All dimensions and tolerances are made according to original specs.

Chart

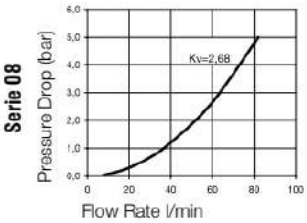

Non valved

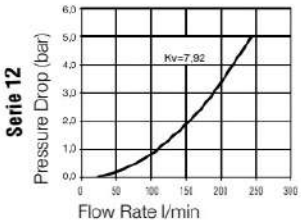

Non valved

Material

Coupling		Plug	
Body	Brass, Nickel Plated	Plug	Brass, Nickel Plated
Locking Balls	AISI 420		
Spring	AISI 301		
Seal	FKM		

Working Pressure

15 bar, maximum static working pressure with safety factor of 4 to 1.

Working Temperature

Water -15°C up to +140°C
Oil -15°C up to +180°C

Straight Coupling

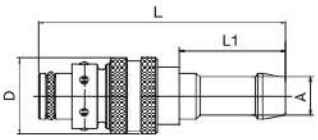

DN	Series	↔	A	D	L	L1	
6	08	08K8	8	20	65	28	10
8		08K10	10	20	65	28	10
		08K12	13	20	65	28	10
9	12	12K13	13	28	77	33	10
12		12K16	16	28	77	33	5

Straight Coupling - Push Lock

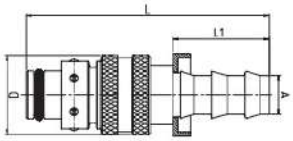

DN	Series	↔	A	D	L	L1	
8	08	08K10-PL	10	20	61,5	24,5	10
		08K12-PL	13	20	65	28	10
12	12	12K13-PL	13	28	77	33	10

90° Coupling

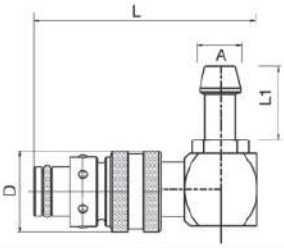

DN	Series	↔	A	D	L	L1	
8	08	08K10/90	10	20	51	20	10
		08K12/90	13	20	51	20	10
9	12	12K13/90	13	28	59	25	5
12		12K16/90	16	28	62	25	5

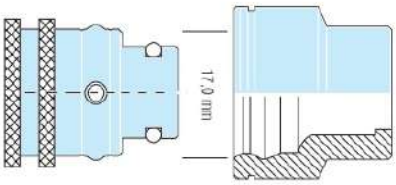

Series 08

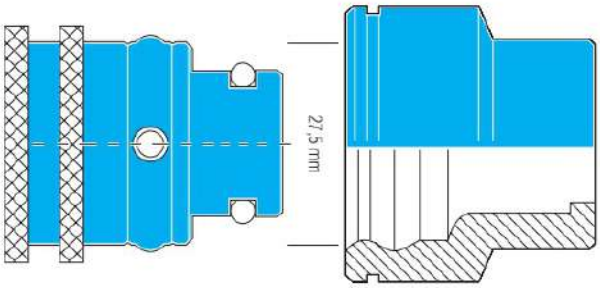

Series 12

90° Coupling - Push Lock

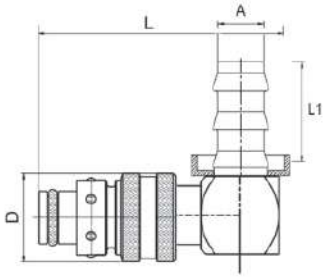

DN	Series	↔	A	D	L	L1	
8	08	08K10/90-PL	10	20	51	20	10
		08K12/90-PL	13	20	51	20	10
9	12	12K13/90-PL	13	28	59	25	10
12		12K16/90-PL	16	28	62	25	10

45° Coupling

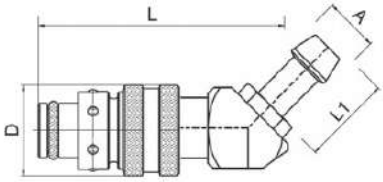

DN	Series	↔	A	D	L	L1	
8	08	08K10/45	10	20	51	20	10
		08K12/45	13	20	51	20	10
9	12	12K13/45	13	28	55	25	5
12		12K16/45	16	28	55	25	5

45° Coupling - Push Lock

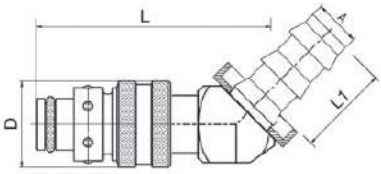

DN	Series	↔	A	D	L	L1	
8	08	08K10/45-PL	10	20	51	20	10
		08K12/45-PL	13	20	51	20	10
9	12	12K13/45-PL	13	28	55	25	5
12		12K16/45-PL	16	28	55	25	5

See explanation of symbols on page 360

Female Threaded Coupling

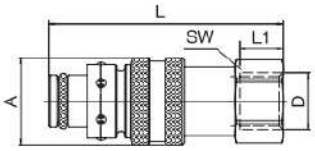

DN	Series	↔	A	D	L	L1	
8	08	08KIR1/4	20	G1/4	43	15	10
12	12	12KIR1/2	20	G1/2	60	20	10

Male Plug

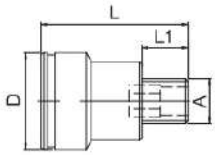

DN	Series	↔	A	D	L	L1	SW	
8	08	08NM10	M10x1	21	32	10	6	25
		08NR1/8	G1/8	21	32	10	6	25
		08NR1/4	G1/4	21	33	12	8	25
		08NR3/8	G3/8	21	24	13	8	25
12	12	12NR3/8	G3/8	32	41	13	10	10
		12NR1/2	G1/2	32	44	16	14	10
		12NR3/4	G3/4	32	32	19	14	10

Female Plug

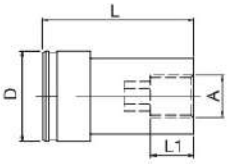

DN	Series	↔	A	D	L	L1	SW	
8	08	08NR1/8I	G1/8	21	35	10	6	10
		08NR1/4I	G1/4	21	40	14	8	10
12	12	12NR3/8I	G3/8	32	49	14	12	10
		12NR1/2I	G1/2	32	50	14	12	10

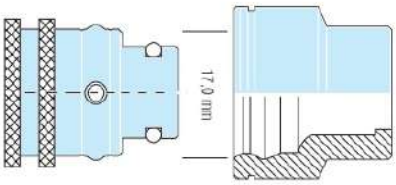

Series 08

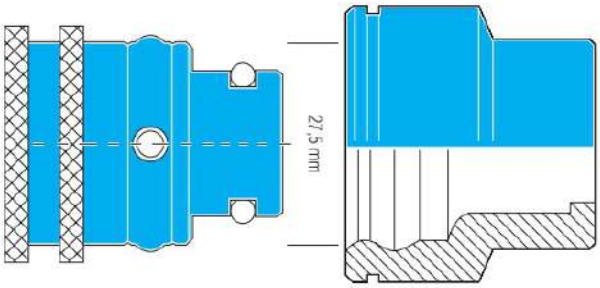

Series 12

FRENCH SERIES

90° Plug

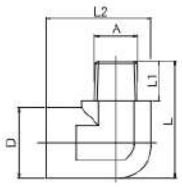

DN	Series	↔	A	D	L	L1	L2	
8	08	08NR1/8/90	R1/8	22	34	11	33	10
		08NR1/4/90	R1/4	22	37	13	33	10
		08NR3/8/90	R3/8	22	37	13	33	10

45° Plug

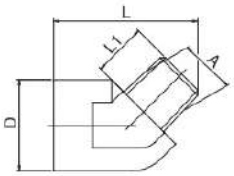

DN	Series	↔	A	D	L	L1	L2	
8	08	08NR1/8/45	R1/8	22	33	10,5		10
		08NR1/4/45	R1/4	22	33	10,5		10

Extended Plug

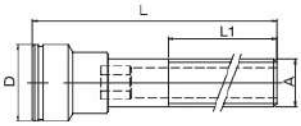

DN	Series	↔	A	D	L	L1	SW	
8	08	08NR1/8/50	G1/8	21	50	28	6	10
		08NR1/8/100	G1/8	21	100	60	6	10
		08NR1/8/150	G1/8	21	150	60	6	10
		08NR1/4/50	G1/4	21	50	28	8	10
		08NR1/4/100	G1/4	21	100	60	8	10
		08NR1/4/150	G1/4	21	150	60	8	10
		08NR1/4/200	G1/4	21	200	60	8	10

See explanation of symbols on page 360

Coupling Colour Tags

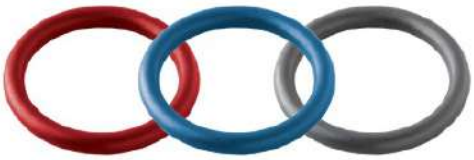

	Series	Part No.	Colour	
Colour Clip for Couplers	08	08KR		10
Colour Clip for Couplers		08KB		10
Colour Clip for Couplers		08KS		10
Colour Clip for Couplers	12	12KR		10
Colour Clip for Couplers		12KB		10
Colour Clip for Couplers		12KS		10

Plug Colour Tags

	Series	Part No.	Colour	
Colour Clip for Connectors	08	08NR		10
Colour Clip for Connectors		08NB		10
Colour Clip for Connectors		08NS		10
Colour Clip for Connectors	12	12NR		10
Colour Clip for Connectors		12NB		10
Colour Clip for Connectors		12NS		10

Replacement Seals FKM +200°C

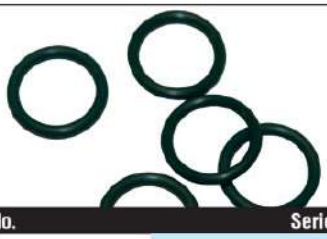

Part No.	Series	S	
08V	08	8	10
12V	12	12	10

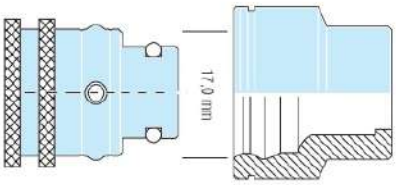

Series 08

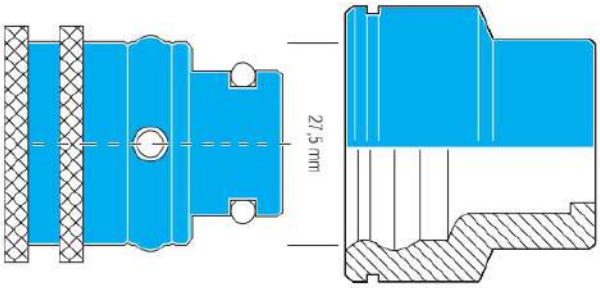

Series 12

Nominal Diameter

6 / 9 / 12 / 16 / 25

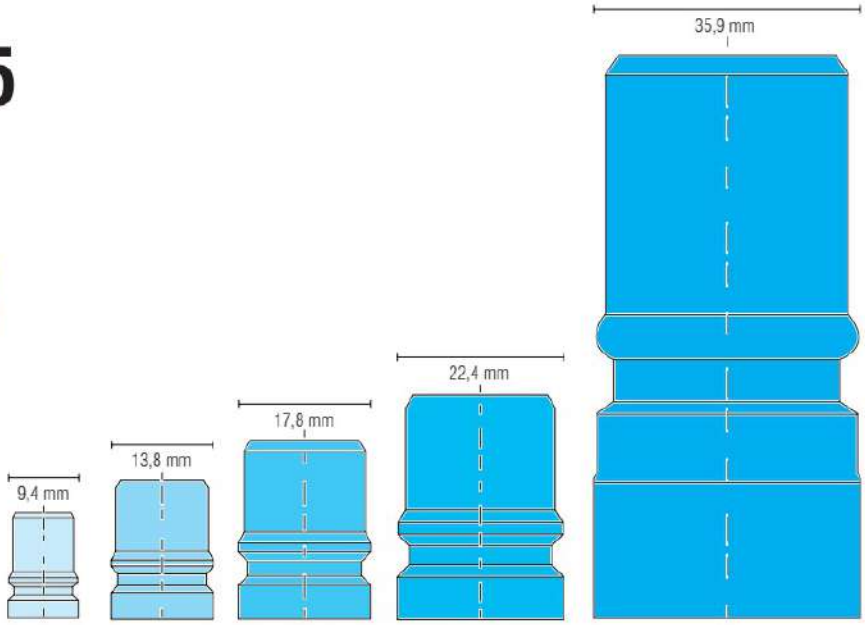

Illustration scale 1:1

Technical Description

Coupling series especially developed for connecting coolant lines on injection moulds.

Fully interchangeable with other brands with same plug profiles.

All dimensions and tolerances are made according to original specs.

Chart

Single Shut-Off

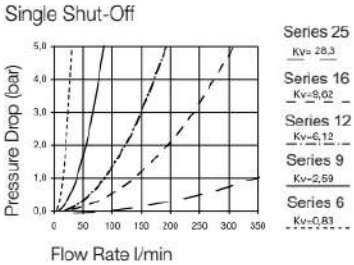

Double Shut-Off

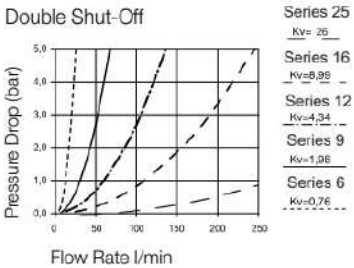

Material

Coupling

Body	Brass, Nickel Plated
Locking Balls	AISI 420
Spring	AISI 301
Seal	FKM

Plug	**Series 6/9/12**	**Series 16/25**
Plug Profile	Brass, Nickel Plated	Steel, Zinc Plated
Back Body	Brass, Nickel Plated	Brass, Nickel Plated
Valve	Brass	Brass
Spring	AISI 301	AISI 301
Seal	FKM	FKM

Working Pressure

15 bar, maximum static working pressure with safety factor of 4 to 1.

Working Temperature

Water -15°C up to +140°C
Oil -15°C up to +180°C

Straight Coupling

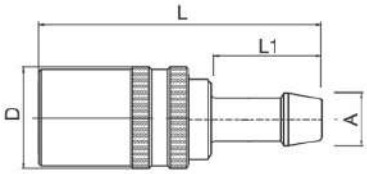

DN	Series		A	D	L	L1	
6	6	F6K8V	8	20	58	22	10
9	9	F9K12V	12	24	71	25	10
12	12	F12K16V	16	32	90,5	32	10
16	16	F16K19V	19	38	112,5	36	5

Male Threaded Coupling

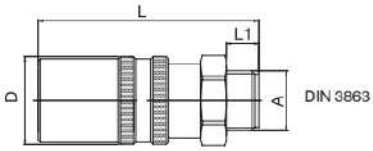

DN	Series		A	D	L	L1	
6	6	F6KUR1/4V	G 1/4	20	54	9	10
9	9	F9KUR3/8V	G 3/8	24	61,0	9	10
12	12	F12KUR1/2V	G 1/2	32	74,5	12	10
16	16	F16KUR3/4V	G 3/4	38	90,5	17	5
25	25	F25KUR1/1V	G 1	60	142	19	1
		F25KUR1-1/4V	G 1-1/4	60	144	22	1

90° Coupling

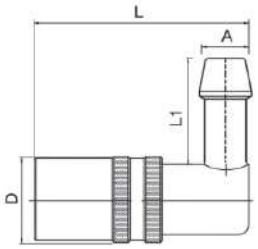

DN	Series		A	D	L	L1	
6	6	F6K8V/90	8	20	60,5	22	10
9	9	F9K10V/90	10	24	60,5	22	10
		F9K12V/90	12	24	60,5	28,5	10

FRENCH MATIC SERIES

Female Threaded Coupling

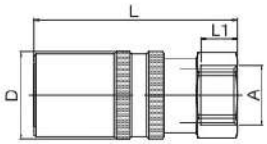

DN	Series		A	D	L	L1	
6	6	F6KIR1/4V	G1/4	20	45	10	10
9	9	F9KIR3/8V	G3/8	24	53	10	10
12	12	F12KIR1/2V	G1/2	32	67	12	10
16	16	F16KIR3/4V	G3/4	38	90	20	5
25	25	F25KIR1/1V	G1	60	140	21	1
		F25KIR1-1/4V	G1.1/4	60	140	21	1

Valved Plug

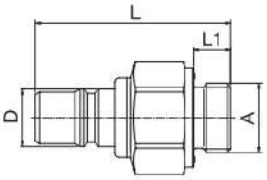

DN	Series		A	D	L	L1	HEX	
6	6	F6NR1/8V	G 1/8	9,4	45	7	17	10
9	9	F9NR1/4V	G 1/4	13,8	45	9	19	10
		F9NR3/8V	G 3/8	13,8	48	12	24	10
		F9NR1/2V	G 1/2	13,8	50	12	27	10
12	12	F12NR3/8V	G 3/8	17,8	60	9	24	10
		F12NR1/2V	G 1/2	17,8	62	12	27	10
		F12NR3/4V	G 3/4	17,8	64	16	32	10
16	16	F16NR3/4V	G 3/4	22,4	78	16	34	5
		F16NR1/1V	G 1	22,4	81	19	41	5
25	25	F25NR1/1V	G 1	36	149,5	19	50	1
		F25NR1-1/4V	G 1 1/4	36	152,5	22	50	1

See explanation of symbols on page 360

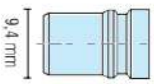

Series 6

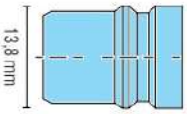

Series 9

Valved Plug Taper Thread

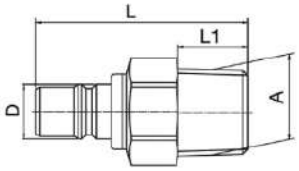

DN	Series		A	D	L	L1	HEX	
6	6	F6NT1/8V	1/8	9,4	45,8	10	17	10
		F6NT1/4V	1/4	9,4	44,8	12	17	10
9	9	F9NT1/4V	1/4	13,8	48,5	12	19	10
		F9NT3/8V	3/8	13,8	47	12	19	10
12	12	F12NT3/8V	3/8	17,8	63	13	24	10
		F12NT1/2V	1/2	17,8	64,5	17	24	10
16	16	F16NT3/4V	3/4	22,4	83	21	32	5

Male Plug with Innner Hex

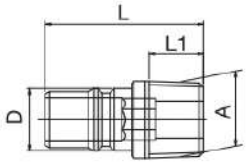

DN	Series		A	D	L	L1	HEX	
6	6	F6NR1/8	R 1/8	10	30	9	5	10
9	9	F9NR1/4	R 1/4	13,8	35	12	8	10
		F9NR3/8	R 3/8	13,8	35	12	8	10
12	12	F12NR3/8	R 3/8	17,8	40	12	10	10

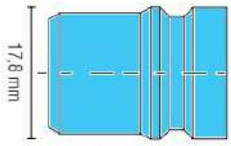

Series 12

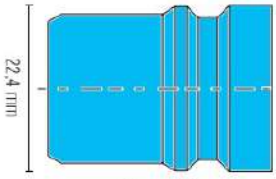

Series 16

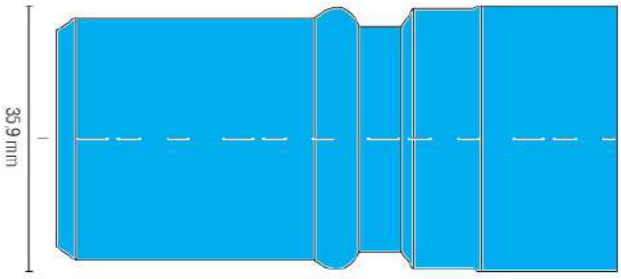

Series 25

FRENCH MATIC SERIES

Male Plug Taper Thread

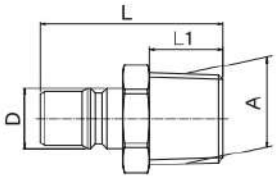

DN	Series	↔	A	D	L	L1	HEX	
12	12	F12NR1/2	R 1/2	17,8	42	17	22	10
16	16	F16NR3/4	R 3/4	22,4	59	19	27	10

Valved Plug Short Model

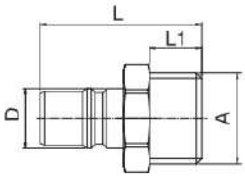

DN	Series		A	D	L	L1	HEX	
9	9	F9NR1/2V-S	G 1/2	13,8	37	12	22	10
12	12	F12NR3/4V-S	G 3/4	17,8	46	16	27	10

Male Plug

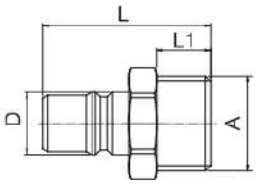

DN	Series	↔	A	D	L	L1	HEX	
9	9	F9NR1/2	G 1/2	13,8	37	12	22	10
12	12	F12NR3/4	G 3/4	17,8	46	16	27	10

See explanation of symbols on page 360

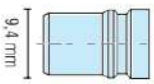

Series 6

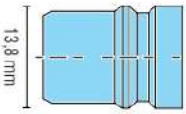

Series 9

Female Plug

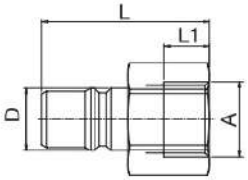

DN	Series	↔	A	D	L	L1	HEX	
6	6	F6NR1/4I	G 1/4	9,4	34	11	17	10
9	9	F9NR3/8I	G 3/8	13,8	37	10	22	10
12	12	F12NR1/2I	G 1/2	17,8	45	12	27	10
25	25	F25NR1/1I	G 1	36	100	20	41	1

Female Plug Valved

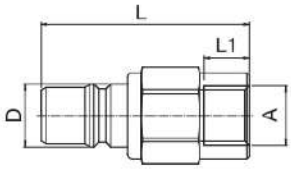

DN	Series		A	D	L	L1	HEX	
9	9	F9NR1/4VI	G 1/4	13,8	46	10	19	10
		F9NR3/8VI	G 3/8	13,8	48	10	22	10
16	16	F16NR3/4VI	G 3/4	22,4	80,5	16	32	5
25	25	F25NR1/1VI	G 1	36	148,5	20	50	1
		F25NR1-1/4VI	G 1-1/4	36	158	20	50	1

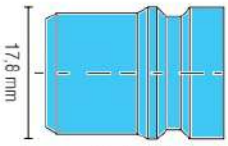

Series 12

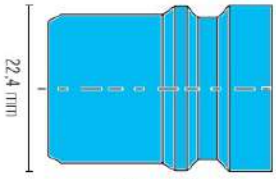

Series 16

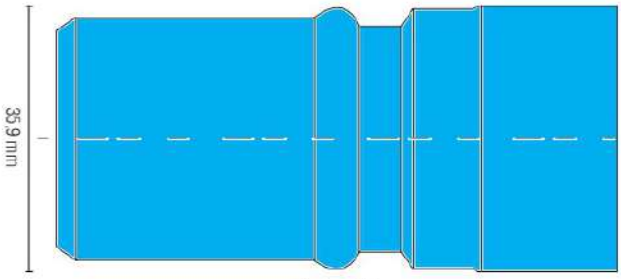

Series 25

Nominal Diameter

75 / 85 / 95 / 105

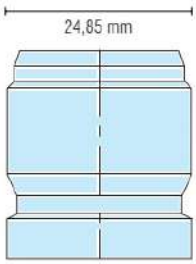

Series 75

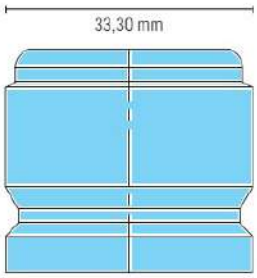

Series 85

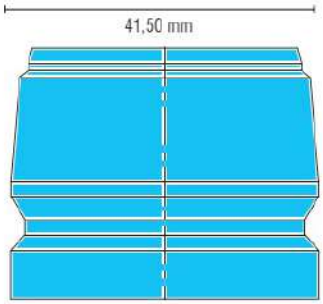

Series 95

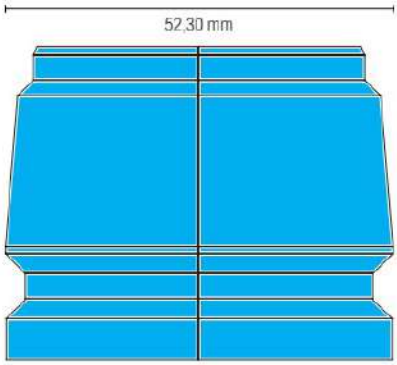

Series 105

Illustration scale 1:1

Series	Nominal Diameter (DN)
75	18,0 mm
85	23,8 mm
95	30,3 mm.
105	36,5 mm.

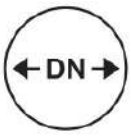

Technical Description

Coupling series especially developed for connecting feed lines on Manifolds.

Temperature control units or chiller cooling lines.

The Couplings offer maximum flow capacity.

Material

Coupling		Plug
Back Body	Brass	Brass
Valve Body	Brass	
Sleeve	Brass	
Locking Balls	AISI 420	
Spring	AISI 301	
Seal	FKM	

Working Pressure

15 bar, maximum static working pressure with safety factor of 4 to 1.

Working Temperature

Water -15°C up to +140°C
Oil -15°C up to +180°C

Straight Coupling

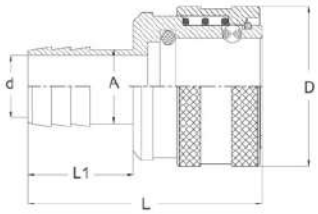

DN	Series	Part No.	A	D	d	L	L1	
18	75	75K19	19	41	16	60	27	1
23,8	85	85K25	25	50	21,5	82	41,5	1
30,3	95	95K32	32	64	28	62	39	1
36,5	105	105K38	38	79	34	104	46	1

Male Threaded Coupling

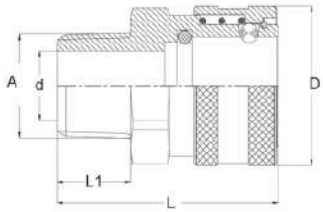

DN	Series	Part No.	A	D	L	L1	d	
18	75	75KUR3/4	3/4" BSPT	41	57	19	18	1
23,8	85	85KUR1/1	1" BSPT	50	65,5	25	24,5	1
30,3	95	95KUR1-1/4	1-1/4" BSPT	64	76,4	24	31,8	1
36,5	105	105KUR 1-1/2	1-1/2" BSPT	79	88,8	25	36,5	1

Female Threaded Coupling

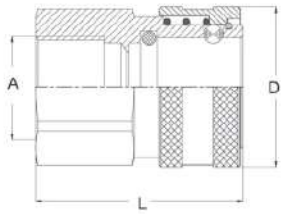

DN	Series	Part No.	A	D	L	
18	75	75KIR3/4	3/4" BSP	41	53,3	1
23,8	85	85KIR1/1	1" BSP	50	60	1
30,3	95	95KIR1-1/4	1-1/4" BSP	64	62	1
36,5	105	105KIR1-1/2	1-1/2" BSP	79	74	1

LARGE FLOW COUPLINGS

Male Plug

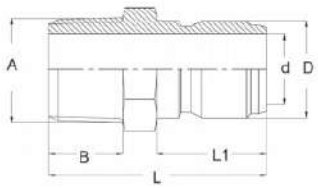

DN	Series	Part No.	A	D	L	L1	d	
18	75	75NR3/4	3/4" BSPT	24,85	56	19	18	1
23,8	85	85NR1/1	1" BSPT	33,3	63,6	14,4	23,8	1
30,3	95	95NR1-1/4	1-1/4" BSPT	41,5	71	24,5	30,3	1
36,5	105	105NR1-1/2	1-1/2" BSPT	52,3	84	25	36,5	1

Female Plug

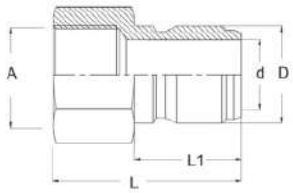

DN	Series	Part No.	A	D	L	d	
18	75	75NR3/4I	3/4" BSP	24,85	49	18	1
23,8	85	85NR1/1I	1" BSP	33,3	59,5	23,8	1
30,3	95	95NR1-1/4I	1-1/4" BSP	41,5	61,9	30,3	1
36,5	105	105NR1-1/2I	1-1/2" BSP	52,3	67	36,5	1

Hosetail Plug

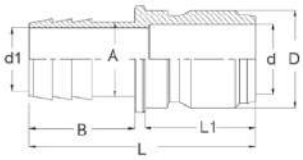

DN	Series	Part No.	A	D	L	d1	d	
18	75	75N19	19	24,85	49	16	18	1
23,8	85	85N25	25	33,3	59,5	21,5	23,8	1
30,3	95	95N32	32	41,5	61,9	28	30,3	1
36,5	105	105N38	38	52,3	99	34	36,5	1

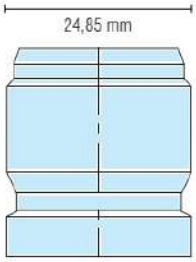

Series 75

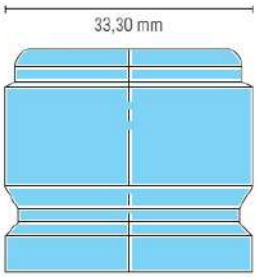

Series 85

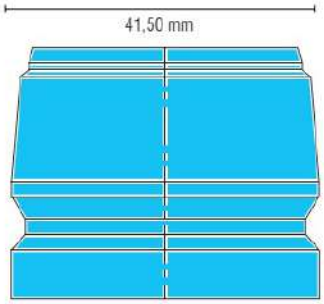

Series 95

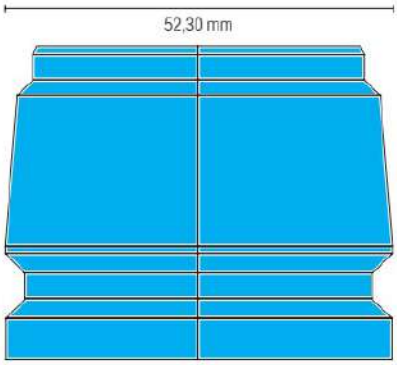

Series 105

Quick and safe mould changes with our Multi Couplings

Moulds with many cooling connections can be time consuming and may lead to incorrect connections. With our Multi Couplings you can connect all connection in one single operation and eliminate any incorrect connections.

Coupling Plate (Machine Side)

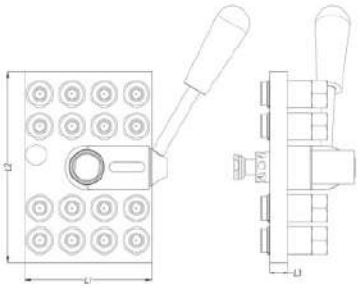

Part No.	# Circuits	# Connections	L1	L2	L3	
MC4	4	8	102	104	14	1
MC6	6	12	154	78	14	1
MC8	8	16	154	104	14	1
MC10	10	20	206	104	14	1
MC12	12	24	240	104	14	1

Supplied without couplings (order separately).

Coupling Plate (Machine Side) French Matic Series 9

Connection	Part No.	Part No.	Part No.
Ø 10	MC-C10	MC-C10P	
Ø 13	MC-C13	MC-C13P	
G3/8"			MC-C3/8

Locking rings inlcuded.
Couplers are with shut off valves and 9 mm. flow capacity.

MULTI COUPLINGS

Coupling Plate - with Inlet and Outlet Female Manifold

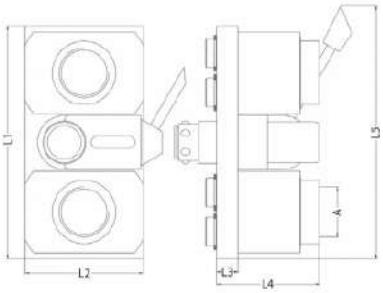

Part No.	# Circuits	# Connection	A	L1	L2	L3	
MC6-1	6	12	G1"	154	78	14	1
MC10-1-1/4	10	20	G1-1/4"	206	103	14	1
MC12-1-1/4	12	24	G1-1/4"	230	103	14	1

Coupling Plate (Mould Side)

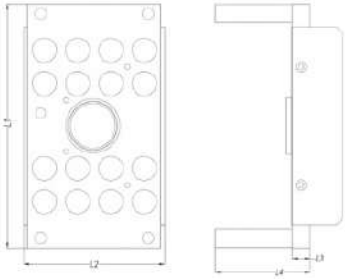

Part No.	# Circuits	# Connections	L1	L2	L3	L4	
MM4-P	4	8	140	104	14	60	1
MM6-P	6	12	190	88	14	60	1
MM8-P	8	16	190	110	14	60	1
MM10-P	10	20	206	110	14	90	1
MM12-P	12	24	256	110	14	90	1

Supplied without Nipples.

Nipples for Coupling Plate (Mould Side) French Matic Series 9

Connection	Part No.	Part No.	Part No.	Part No.
Ø 10			NC-C10	NC-C10P
Ø 13			NC-C13	NC-C13P
G3/8"	NC-C3/8V	NC-C3/8		

Locking rings inlcuded.
Nipples are with size 9 mm. flow capacity.

See explanation of symbols on page 360

Hose Selection Guide

Our Hoses are specially engineered for Mould Cooling applications. We offer a wide range of hoses suitable to match any need for the perfect cooling circuit.

Our hoses are available in most common sizes and in 3 main colours to create logic circuits easy to identify cold and warm transfer connections.

We recommend using Stainless steel crimp ferules which allow you to make profesional and safe assemblies.

If you require certified hose assemblies then visit our online configurator at **www.hoseconfigurator.net**.

Type	Water	Oil	Working Temperature	Wear Resistance	Chemical Resistance	Pressure Resistance	Flexibility
PVC	✓✓✓	✓	60°C	✓✓	✓✓	✓✓	✓
Push On	✓✓✓	✓	125°C	✓✓✓	✓✓	✓✓	✓✓
G - EPDM	✓✓✓	✓	100°C	✓	✓	✓✓	✓✓
NBR	✓	✓✓✓	135°C	✓✓	✓✓✓	✓✓✓	✓✓
E - EPDM	✓✓✓	✓	140°C	✓	✓	✓✓	✓✓
Silicone + SS	✓✓	✓	170°C	✓✓✓	✓	✓✓	✓✓✓
FKM + SS	✓	✓✓✓	200°C	✓✓✓	✓✓✓	✓✓	✓✓
PTFE + SS	✓✓✓	✓✓✓	260°C	✓✓✓	✓✓✓	✓✓✓	✓✓✓

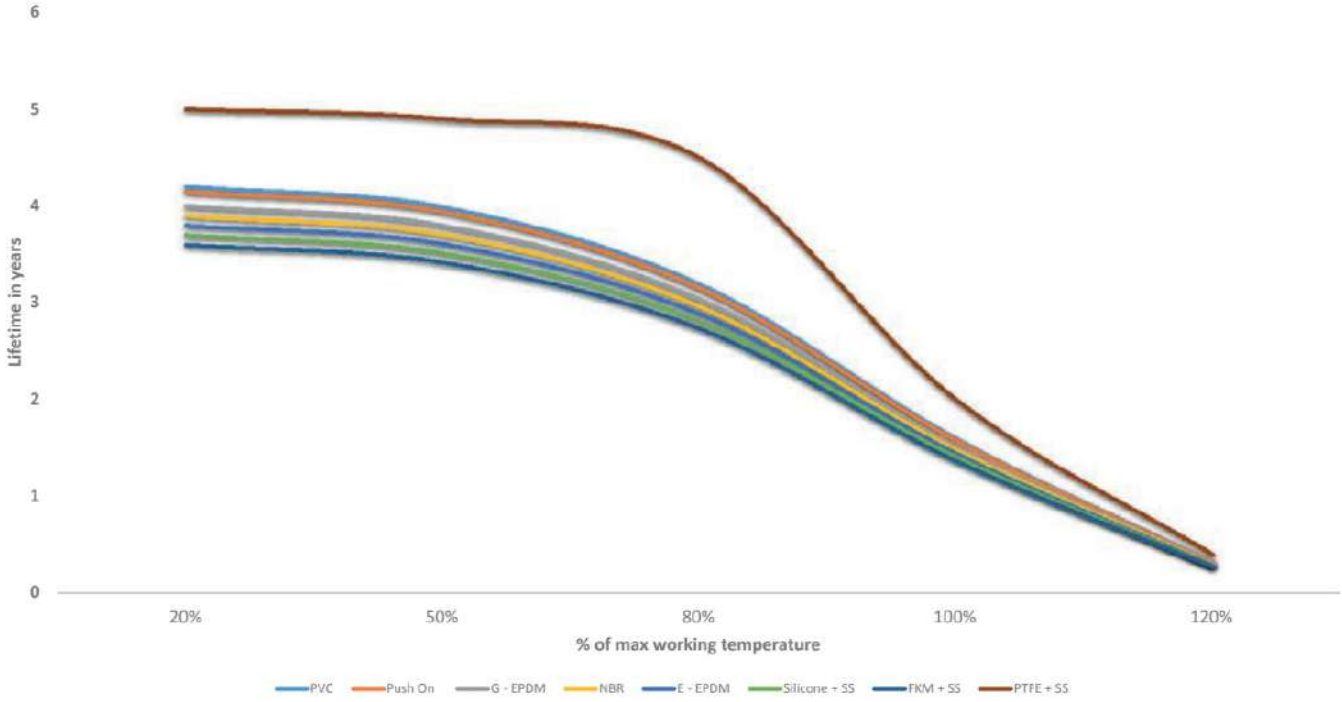

Above figures are only theoritical data, the physical properties are influenced by several factors such as: Pressure, ambient temperatures, wear, additives, sunlight, movement action, bending radius, connection clamping etc. So an individual calculation of lifetime must be based on all variables.

Material EPDM

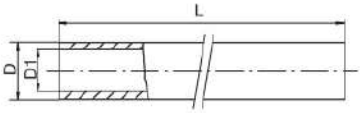

Part No.	D1	D	L (m)	Colour	Working Pressure (Bar)	Burst Pressure (Bar)	Bend Radius	
E10B	10	16,5	50	Blue	15	60	60	1
E10R	10	16,5	50	Red	15	60	60	1
E10S	10	16,5	50	Black	15	60	60	1
E13B	13	21	50	Blue	15	60	90	1
E13R	13	21	50	Red	15	60	90	1
E13S	13	21	50	Black	15	60	90	1
E19B	19	27	30	Blue	15	60	110	1
E19R	19	27	30	Red	15	60	110	1
E19S	19	27	30	Black	15	60	110	1

Tube:
Black, antistatic, smooth EPM Nitrosamine free rubber compound, resistan t to heat, hot water and water Vapour.

Reinforcement:
Synthetic textile yarns.

Cover:
Blue, Red, or Black smooth EPDM Nitrosamine free rubber compound. Resistant to abrasion, ozone, heat, and weather.

Applications:
Flexible hose designed for hot water and water vapour for mould temperature controlling.

Temperature range:
Working temperature: Up to +140°C (+284°F) peak up to +164°C (+327°F).
Note: Lifetime of this hose will be substantially reduced if operating temperatures exceed +130°C (+266°F).

Tolerances:
UNI EN ISO 1307/97 tolerances for inside diameters up to and including 25 mm.

On inside diameter:
for I.D. 5.1 up to 20 mm ± 0.80 mm.
Length tolerance: ± 1%.

Material EPDM

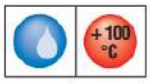

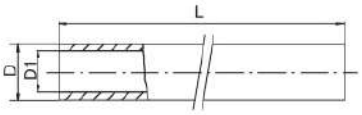

Part No.	D1	D	L (m)	Colour	Working Pressure (Bar)	Burst Pressure (Bar)	Bend Radius	
G10B	10	16,5	50	Blue	15	60	60	1
G10R	10	16,5	50	Red	15	60	60	1
G10S	10	16,5	50	Black	15	60	60	1
G13B	13	21	50	Blue	15	60	90	1
G13R	13	21	50	Red	15	60	90	1
G13S	13	21	50	Black	15	60	90	1
G19B	19	27	30	Blue	15	60	110	1
G19R	19	27	30	Red	15	60	110	1
G19S	19	27	30	Black	15	60	110	1
G25B	25	35	20	Blue	15	60	130	1
G25R	25	35	20	Red	15	60	130	1
G38B	38	48	20	Blue	10	30	200	1
G38R	38	48	20	Red	10	30	200	1

Tube:
Black, antistatic, smooth EPDM Nitrosamine free rubber compound, resistant to water, hot water, air, light-chemical media.

Reinforcement:
Synthetic textile yarns.

Cover:
Red, Blue or Black smooth EPDM Nitrosamine free rubber compound.

Applications:
Designed for air, cold and hot water, and light-chemical media for mould temperature controlling.

Temperature range:
Working temperature: Up to +100°C (+248°F).

Tolerances:
UNI EN ISO 1307/97 tolerances for inside diameters up to and including 25 mm.

On inside diameter:
for I.D. 5.1 up to 20 mm ± 0.80 mm.
Length tolerance: ± 1%.

See explanation of symbols on page 360

Material EPDM - Push On Hose

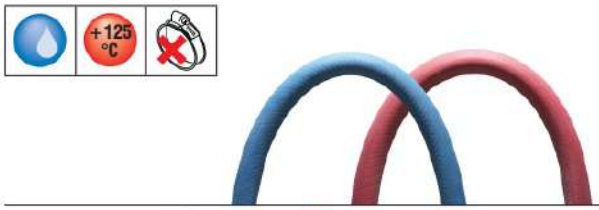

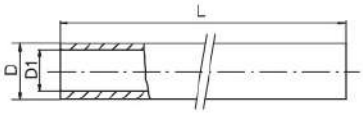

Part No.	D1	D	L (m)	Colour	Working Pressure (Bar)	Burst Pressure (Bar)	Bend Radius	
PL10B-HT	10	16	50		28	112	80	1
PL10R-HT	10	16	50		28	112	80	1
PL13B-HT	13	20	50		28	112	100	1
PL13R-HT	13	20	50		28	112	100	1
PL19B-HT	19	28,50	50		21	84	140	1
PL19R-HT	19	28,50	50		21	84	140	1

Tube:
Black, smooth special rubber for high temperature.
Our Push On fittings are recommended.

Reinforcement:
Hhigh strength synthetic textile braids.

Cover:
Red or blue, abrasion, and weathering resistant.

Surface:
Smooth fabric.

Applications:
Suitable for delivery of air, hot and cold water, and chemical products low with push lock fitting system.

Temperature range:
Up to +125°C (+257°F).

Tolerances:
UNI EN ISO 1307/97 tolerances for inside diameters up to and including 25 mm.

On inside diameter:
For I.D. 5.1 up to 20 mm ± 0.80 mm.
Length tolerance: ± 1%.
Standards: CNOMO E07.21.115.N.

Material NBR

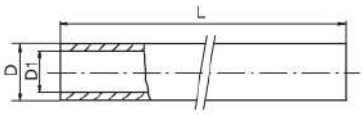

Part No.	D1	D	L (m)	Colour	Working Pressure (Bar)	Burst Pressure (Bar)	Bend Radius	
N10S	10	16,5	50		28	110	75	1
N13S	13	20	50		28	110	100	1

Tube:
Black, antistatic, smooth NBR rubber compound, resistant to Oil.

Reinforcement:
Polyvinyl alcohol (PVA).

Cover:
Black smooth CPE rubber compound.

Applications:
Designed for Oil mould temperature controlling.

Temperature range:
Working temperature: Up to +135°C (+275°F)
peak up to +150°C (+302°F).

Tolerances:
UNI EN ISO 1307/97 tolerances for inside diameters up to and including 25 mm.

On inside diameter:
for I.D. 5.1 up to 20 mm ± 0.80 mm.
Length tolerance: ± 1%.

Material PVC

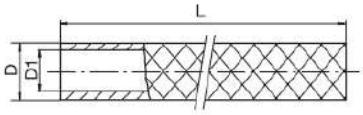

Part No.	D1	D	L (m)	Colour	Working Pressure (Bar)	Burst Pressure (Bar)	Bend Radius	
P10T	10	16	30		17	51	65	1
P10B	10	16	30		17	51	65	1
P10R	10	16	30		17	51	65	1
P13T	13	19	30		15	45	85	1
P13B	13	19	30		15	45	85	1
P13R	13	19	30		15	45	85	1
P19T	19	26	30		10	30	125	1
P19B	19	26	30		10	30	125	1
P19R	19	26	30		10	30	125	1

Tube:
Transparent soft PVC hose for low temperature water and air.

Reinforcement:
High-strength PES fiber.

Cover:
Clear, blue or red transparent soft PVC. Resistant to abrasion, ozone, and weather.

Applications:
Flexible hose designed for cold water for mould temperature controlling.

Temperature range:
Working temperature: Up to +60°C (+140°F) peak up to +90°C (+194°F).
Note: Lifetime of this hose will be substantially reduced if operating temperatures exceed +60°C (+140°F).

Tolerances:
UNI EN ISO 1307/97 tolerances for inside diameters up to and including 25 mm.

On inside diameter:
for I.D. 5.1 up to 20 mm ± 0.80 mm.
Length tolerance: ± 1%.

Material Silicone - Steam Resistant

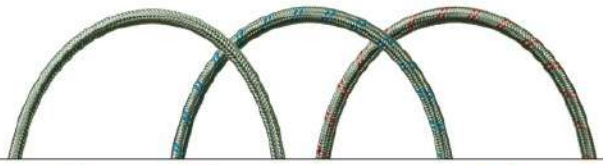

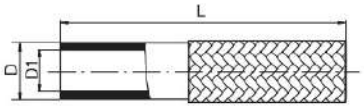

Part No.	D1	D	L (m)	Colour	Working Pressure (Bar)	Burst Pressure (Bar)	Bend Radius	
S10	10	15	25		15	45	40	1
S10B	10	15	25		15	45	40	1
S10R	10	15	25		15	45	40	1
S13	13	19	25		15	45	60	1
S13B	13	19	25		15	45	60	1
S13R	13	19	25		15	45	60	1
S19	19	29	25		15	45	100	1
S19B	19	29	25		15	45	100	1
S19R	19	29	25		15	45	100	1

Tube:
Clear Silicone Shore 60°.

Reinforcement:
Stainless steel overbraid with colour marking made of textile meta aramid. (high temperature resistant)

Applications:
Designed for water and light chemical media for mould temperature controlling.

Temperature range:
Working temperature: Max +170°C / +338°F.

Tolerances:
DIN 7715.

See explanation of symbols on page 360

Material FKM

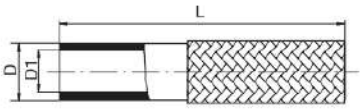

Part No.	D1	D	L (m)	Colour	Working Pressure (Bar)	Burst Pressure (Bar)	Bend Radius	
V10	10	16	25		15	45	50	1
V13	13	19	25		15	45	60	1

Tube:
Black Viton shore 65°.

Reinforcement:
Stainless steel overbraid.

Applications:
Designed for Oil and chemical media for mould temperature controlling.

Temperature range:
Working temperature: Oil Max +200°C (+392°F)
Working temperature: Water Max +140°C (+284°F).

Tolerances:
ISO DIN 3302-1 E2.

High Temperature Water and Oil Hose Assemblies

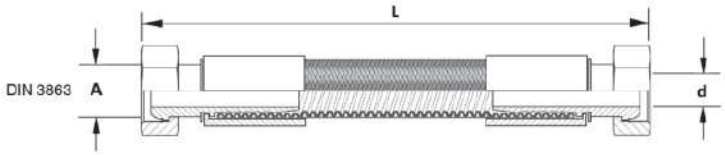

Stainless Steel Braided	Stainless Steel Braided + Red Silicone Jacket	Stainless Steel Braided + Blue Silicone Jacket	A	L	Hose ID (d)	Working Pressure (Bar)	Burst Pressure (Bar)	Bend Radius
T10300R1/4	T10300R1/4-R	T10300R1/4-B	1/4" BSPP	300	10	20	80	22
T10600R1/4	T10600R1/4-R	T10600R1/4-B		600				
T10800R1/4	T10800R1/4-R	T10800R1/4-B		800				
T101000R1/4	T101000R1/4-R	T101000R1/4-B		1000				
T101250R1/4	T101250R1/4-R	T101250R1/4-B		1250				
T101500R1/4	T101500R1/4-R	T101500R1/4-B		1500				
T102000R1/4	T102000R1/4-R	T102000R1/4-B		2000				
T10300M14	T10300M14-R	T10300M14-B	M14x1,5	300	10	20	80	22
T10600M14	T10600M14-R	T10600M14-B		600				
T10800M14	T10800M14-R	T10800M14-B		800				
T101000M14	T101000M14-R	T101000M14-B		1000				
T101250M14	T101250M14-R	T101250M14-B		1250				
T101500M14	T101500M14-R	T101500M14-B		1500				
T102000M14	T102000M14-R	T102000M14-B		2000				
T13300R3/8	T13300R3/8-R	T13300R3/8-B	3/8" BSPP	300	13	20	80	25
T13600R3/8	T13600R3/8-R	T13600R3/8-B		600				
T13800R3/8	T13800R3/8-R	T13800R3/8-B		800				
T131000R3/8	T131000R3/8-R	T131000R3/8-B		1000				
T131250R3/8	T131250R3/8-R	T131250R3/8-B		1250				
T131500R3/8	T131500R3/8-R	T131500R3/8-B		1500				
T132000R3/8	T132000R3/8-R	T132000R3/8-B		2000				

With 60° Cone Seat swivel fittings DIN 3863.

Tube:
Low profile helically convoluted PTFE (polytetrafluorethylene).

Reinforcement:
Stainless steel overbraid (Red/Blue Silicone cover).

Applications:
Designed for Water, Oil and chemical media for mould temperature controlling.

Temperature range:
Working temperature:
Max +260°C (+500°F)
RED/BLUE: Only +200°C (+392°F).

Tolerances:
ISO DIN 3302-1 E2.

See explanation of symbols on page 360

LEAK FREE HOSE ASSEMBLIES

Order online at: www.hoseconfigurator.net

HOSE PROTECTION

Safety Heat Sleeve

Part No.	Colour	ID (mm)	Length
SHS10		10	20 m
SHS10B		10	20 m
SHS15		15	20 m
SHS15B		15	20 m
SHS20		20	20 m
SHS20B		20	20 m
SHS25		25	20 m
SHS25B		25	20 m
SHS30		30	20 m
SHS30B		30	20 m
SHS40		40	20 m
SHS40B		40	20 m

Protect hoses and cables from heat exposure.
Material: Glass fiber with silicone coating.
Temperature: Up to +260°C continuous heat.

Heat Tape

Part No.	Colour	Thickness (mm)	Width (mm)	Roll Length (mm)
HT-B-3	Blue	0,5	25,4	3000
HT-R-3	Red	0,5	25,4	3000

Material: Silicone.
Resists Temps +260°C (+500°F) to -50°C (-60°F).
No Adhesive Therefore No Residue when Removed.
Conforms to Shape to Create an Air and Water Tight Seal.
Stretches up to 300%.

Safety Sleeve

Part No.	ID (mm)	Flat (mm)	Length (roll)
SS17	17	30	50 m.
SS23	23	40	50 m.
SS30	30	50	50 m.
SS39	39	65	50 m.
SS55	55	90	50 m.

Protect in case of burst hose.
Protect hose from abrasion.
Resistant to chemicals.
Polyester up to +140 degrees.

Safe-Strip, Standard

Part No.	Length (mm)	Bundle max (mm)	Strip Width (mm)
STD70	310	70	40
STD100	435	100	40
STD125	505	125	40
STD155	605	155	40
STD180	680	180	40

Safe-Strip made of polypropylene with Velcro fasteners.

Safe-Strip, with Mounting Eyelet

Part No.	Length (mm)	Bundle max (mm)	Strip Width (mm)
STE70	340	70	40
STE100	455	100	40
STE125	540	125	40
STE155	660	155	40
STE180	765	180	40

Safe-Strip made of polypropylene with Velcro fasteners. With Eyelet.

Safe-Strip with Buckle

Part No.	Length (mm)	Strip Width (mm)
STB50	500	25
STB100	1000	25
STB150	1500	25

Safe-Strip made of polyproylene with quick-release buckle.

Hose Ziptag

Part No.	Type	Colour	Length (mm)	
ZT301R	Plain	Red	300 mm.	10
ZT301B	Plain	Blue	300 mm.	10

Ziptags available in 2 styles.
Plain for individual marking/labelling.

Material: Nylon.
Temperature range: Up to +150°C.

HOSE CUTTING

Hose Cutting Tool

Part No.	Size	
HC025	0-25 mm	1

For PVC and Rubber hoses only.

Spare Blades

Part No.	Size	
HC-SB	One Size	1

Hose Cutter

Part No.	Hose size cut	Length	
HC-600	10-13-19 mm	600 mm	1

- For easy and clean cut of stainless steel braided hoses
- Weight: 1700g
- Length: 600mm

Base Tool

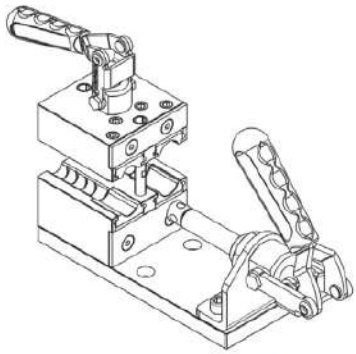

Part No.	Hose range (ID)	Weight KG
HAT-5000	10-13 mm. (3/8" - 1/2")	3,3

Assembly tool ideal for Push-On fittings and standard hose tail couplers, to be perfectly assembled - quick and easy.
Adaptors available for all hosetail fittings and couplers.

Adapters for Hose Assembly Tool

Part No.	Reference	
HAT-01	Series 09/13 European Series 20/30 International	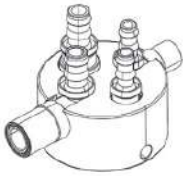
HAT-02	Safety - Ts Series 09/13 European Series 20/30 International	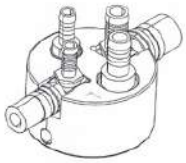
HAT-03	45° Series 09/13 European Series 20/30 International	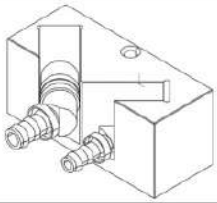
HAT-04	45° Safety - Ts Series 09/13 European Series 20/30 International	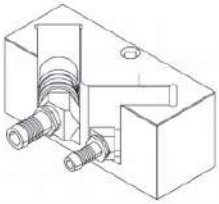

Part No.	Reference	
HAT-05	Series 08/12 French	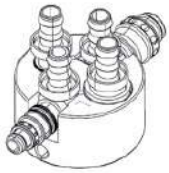
HAT-06	Series Mc.. Multi-Couplers	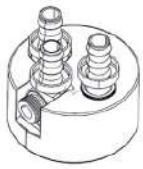
HAT-07	Threaded Hose Nippels G1/8" - G1/4" - G3/8" - M10 - M14	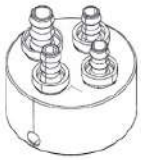
HAT-08	Plain Insert For Custom Recess	

HOSE CLAMPING

Ferrule

STAINLESS STEEL

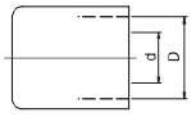

Part No.	D	d		Hose Ref.
C10/15	15,9	10	100	S10
C10/16	16,9	10	100	V10/P10/N10
C10/17	17,5	10	100	G10/E10
C13/19	19	13	100	P13/S13
C13/20	20	13	100	P13/S13
C13/21	20,6	13	100	N13/V13
C13/22	22,5	13	100	G13/E13
C19/29	29	19	100	G19/E19
C19/31*	30,5	19	20	S19

Material: Stainless Steel
* Chrome Plated Steel
Offers perfect and safe connections.

Hand Crimper

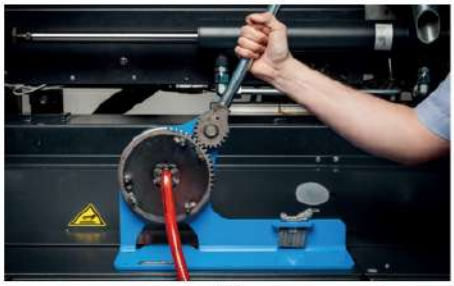

Part No.	Crimp Range (mm)	
X100	10-36	1

Hose Clamps Standard Type

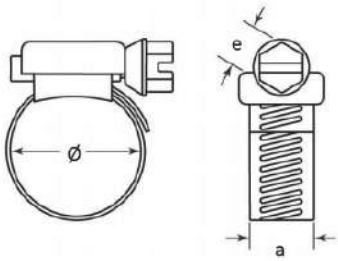

Part No.	Ø	e	a		Hose ref.
K10	11-17	7	9	50	S10/V10/P10/E10/G10/N10
K13	13-20	7	9	50	S13/V13/P13/E13/G13/N13
K19	22-32	7	9	50	S19/P19/E19/G19
K25	32-44	7	9	50	E25/G25

Screw: Electro zinc plated. Band: Galfan/Aluzink. Housing: Painted.

Hose Clamps Heavy Duty

STAINLESS STEEL

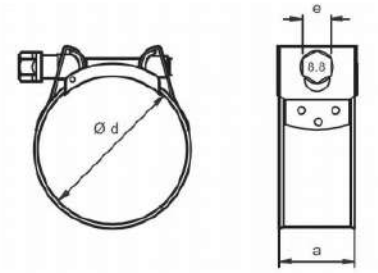

Part No.	Ø	e	a		Hose ref.
HDC2527	25-27	8	18	50	P19/E19/G19
HDC3437	34-37	11	20	50	G25
HDC4751	47-51	11	20	50	G38

Material: Stainless Steel.

Flexible Hose Clip Screwdriver

Part No.	A/F
SD01	7

Flexible screwdriver for hose clips.
7 mm A/F.

Side Pincer

Part No.	Side Pincer	Front Pincer	
PS01	•	•	1

Suitable for Ear Clamps.
Can be used either front or side access.

Two-ear Clip

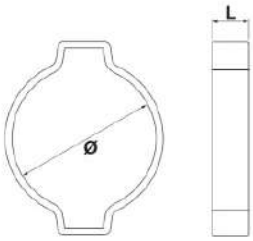

Part No.	ø - ID	L		HOSE Ref
EAR15	13-15	7	100	S10/V10
EAR17	14-17	7	100	P10/N10
EAR18	15-18	7,5	100	E10/G10
EAR20	17-20	7,5	100	S13/V13/P13/N13
EAR23	20-23	8,5	100	E13/G13
EAR27	23-27	8,5	100	P19
EAR28	25-28	9	100	E19/G19

Two-ear clips are an economical solution for simple hose assemblies.
The two ears give the clip extra grip and help to maintain constant pressure around the hose.
Two-ear clips offer great versatility in simple hose assemblies.
Material: St 34 steel : Finish Silver-white Cr3 Zinc-Plated.

Straight Blade Baffles

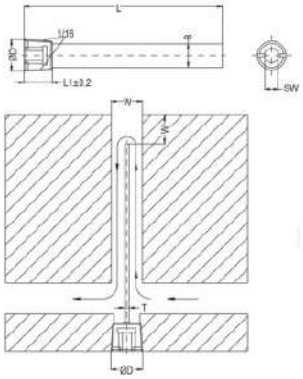

Part No	Thread	SW	W	B	L	L1	T
MB100-1/16	1/16"	4	6,5	6,2	104	8	1,61
MB200-1/16	1/16"	4	6,5	6,2	204	8	1,61
MB100-1/8	1/8"	5	8,5	8,2	104	8	1,61
MB200-1/8	1/8"	5	8,5	8,2	204	8	1,61
MB125-1/4	1/4"	7	11,5	11,2	131	10	2,43
MB250-1/4	1/4"	7	11,5	11,2	258	10	2,43
MB150-3/8	3/8"	8	15	14,2	156	10	2,43
MB300-3/8	3/8"	8	15	14,2	309	10	2,43
MB200-1/2	1/2"	10	18,5	18,2	207	10	2,43
MB400-1/2	1/2"	10	18,5	18,2	410	10	2,43
MB300-3/4	3/4"	12	23,5	23,2	309	12	3,21
MB500-3/4	3/4"	12	23,5	23,2	512	12	3,21

Material: MS58 Brass.

Spiral Blade Baffles

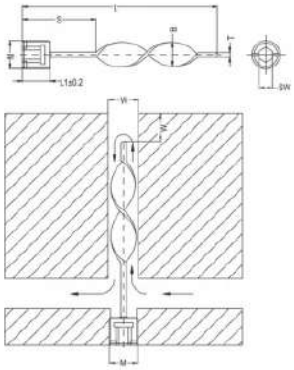

Part No	Thread	S	SW	W	B	L	L1	T
MSB100-1/16	1/16"	51	4	6,5	1/4"	101	8	1,61
MSB200-1/16	1/16"	102	4	6,5	1/4"	203	8	1,61
MSB100-1/8	1/8"	51	5	8,5	5/16"	101	8	1,61
MSB200-1/8	1/8"	102	5	8,5	5/16"	203	8	1,61
MSB125-1/4	1/4"	51	7	11,5	7/16"	127	10	2,43
MSB250-1/4	1/4"	102	7	11,5	7/16"	254	10	2,43
MSB150-3/8	3/8"	51	8	15	9/16"	152	10	2,43
MSB300-3/8	3/8"	102	8	15	9/16"	305	10	2,43
MSB200-1/2	1/2"	76	10	18,5	11/16"	203	10	2,43
MSB400-1/2	1/2"	127	10	18,5	11/16"	406	10	2,43
MSB300-3/4	3/4"	102	12	23,5	15/16"	305	12	3,21
MSB500-3/4	3/4"	153	12	23,5	15/16"	508	12	3,21

Material: MS58 Brass.

Hose Connector with Parallel Thread

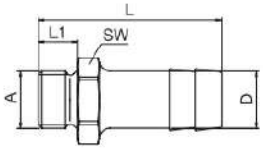

Part No.	A	D	L	L1	SW	
M10M8	M8x0,75	10	33,5	7	11	25
M10M10	M10x1	10	33,5	7	11	25
M10R1/8	1/8" BSP	10	33	7	14	25
M10R1/4	1/4" BSP	10	35	9	17	25
M10R3/8	3/8" BSP	10	37,5	9	17	25
M13M12	M12x1,5	13	40	9	15	25
M13R1/4	1/4" BSP	13	42	9	17	25
M13M14	M14x1,5	13	43	10	17	10
M13M16	M16x1,5	13	40	9	17	10
M13R3/8	3/8" BSP	13	42	9	19	25
M19M24	M24x1,5	19	56	16	27	10
M19R1/2	1/2" BSP	19	54	12	24	10
M19R3/4	3/4" BSP	19	60	16	32	10

Hose Connector with Taper Thread BSPT

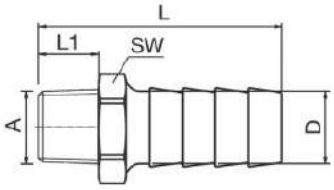

Part No.	A - BSPT	D (Inch)	D (mm)	L	SW	
MH02/04	1/8"	1/4"	6	34	10	25
MH02/06	1/8"	3/8"	10	34	12	25
MH04/04	1/4"	1/4"	6	37	14	25
MH04/06	1/4"	3/8"	10	37	14	25
MH04/08	1/4"	1/2"	13	37	14	25
MH06/06	3/8"	3/8"	10	37	17	25
MH06/08	3/8"	1/2"	13	37	17	25
MH06/10	3/8"	5/8"	16	40	17	25
MH06/12	3/8"	3/4"	19	44	21	25
MH08/06	1/2"	3/8"	10	40,5	21	25
MH08/08	1/2"	1/2"	13	40,5	21	25
MH08/12	1/2"	3/4"	19	46,5	21	25
MH08/16	1/2"	1"	25	50	27	25
MH12/06	3/4"	3/8"	10	42	27	10
MH12/08	3/4"	1/2"	13	42	27	10
MH12/12	3/4"	3/4"	19	48	27	10
MH12/16	3/4"	1"	25	50,5	27	10
MH16/08	1"	1/2"	13	45,5	34	10
MH16/12	1"	3/4"	19	54	34	10
MH16/16	1"	1"	25	54	34	10
MH20/20	1-1/4"	1-1/4"	32	56	48	10
MH20/24	1-1/4"	1-1/2"	38	56	48	10
MH24/20	1-1/2"	1-1/4"	32	58	48	10
MH24/24	1-1/2"	1-1/2"	38	58	48	10

See explanation of symbols on page 360

Push Lock - Hose Connector

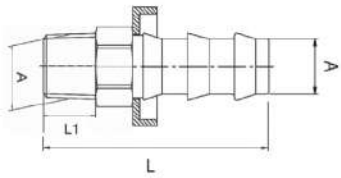

Part No.	A	D	L	L1	
P10R1/8	R1/8	10	39	7	10
P10R1/4	R1/4	10	39	7	10
P10M14	M14x1,5	10	42	7	10
P10R3/8	R3/8	10	43	7	10
P13R1/4	R1/4	13	39	10	10
P13R3/8	R3/8	13	43	10	10
P13R1/2	R1/2	13	43	10	10
P19R1/2	R1/2	19	65	17	5
P19R3/4	R3/4	19	66	18	5
P19R1/1	R1	19	73	23	5

Female Hose Connector

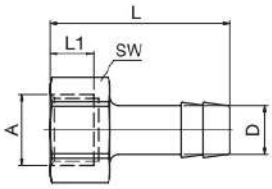

Part No.	A	D	L	L1	SW	
F10R1/8	1/8" BSP	10	33	8	14	25
F10R1/4	1/4" BSP	10	33	8	17	25
F10M14	M14x1,5	10	32	10	17	10
F13R1/4	1/4" BSP	13	39	8	17	25
F13M16	M16x1,5	13	40	10,5	22	10
F13R3/8	3/8" BSP	13	40	8	19	25

Hose Connector - BSPP Thread, Swivel Nut and 60° Cone Seat

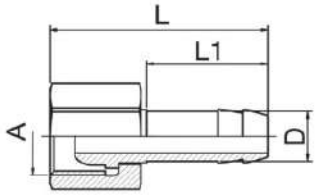

Part No.	A	D	L	L1	SW	
CM14	M14x1,5	10	39,5	22	17	10
CR1/4	G 1/4	10	39,5	22	17	10
CM16	M16x1,5	13	42	25	22	10
CR3/8	G 3/8	13	42	25	22	10
CR1/2	G 1/2	13	45	25	24	10
CM24	M24x1,5	19	52	32	30	10
CR3/4	G 3/4	19	55	32	30	10
CR1	G 1"	25	54	34	38	5

Push Lock - Hose Connector BSPP Thread, Swivel Nut and 60° Cone Seat

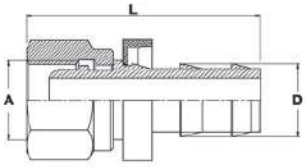

Part No.	A	D	L	SW	
CM14-PL	M14x1,5	10	43	19	10
CR1/4-PL	G 1/4"	10	46,7	19	10
CM16-PL	M16x1,5	13	47,5	21	10
CR3/8-PL	G 3/8"	13	47,5	21	10
CR1/2-PL	G 1/2"	13	48	27	10
CM24-PL	M24x1,5	19	60,5	30	5
CR3/4-PL	G 3/4"	19	60,2	30	5

Hose Connector - BSPP Thread, Swivel Nut and Flat Seat

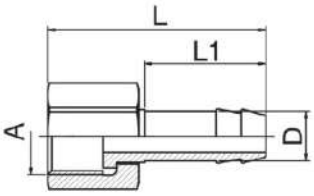

Part No.	A	D	L	L1	SW	
CFR3/8-10	G 3/8	10	39	25	22	10
CFR3/8-13	G 3/8	13	39	25	22	10
CFR1/2-13	G 1/2	13	39	25	24	10
CFR3/4-10	G 3/4	10	34	18	29	5
CFR3/4-13	G 3/4	13	36	22	29	5
CFR3/4-19	G 3/4	19	52	32	32	5
CFR1-19	G 1	19	43	25	37	5
CFR1-25	G 1	25	55	32	38	5
CFR1.1/4-32	G 1-1/4	32	55	32	48	1
CFR1.1/2-38	G 1-1/2	38	55	32	52	1

Supplied without gaskets.

Fiber Gaskets for Flat Seat Hose Connector

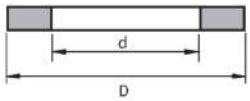

Part No.	D	d	Fit Thread Size	
GK38	14.5	8	G 3/8	1
GK12	18	12,5	G 1/2	1
GK34	24	16	G 3/4	1
GK1	30	25	G 1	1
GK114	38	31	G 1.1/4	1
GK112	44	36	G 1.1/2	1

Extended Hose Connector

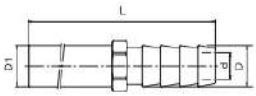

Part No.	D	D1	d	L	SW	
C120/10	10	10	6	120	11	10
C240/10	10	10	8	240	11	10
C150/13	13	14	9	150	15	10
C300/13	13	14	9	300	15	10

90° Hose Connector

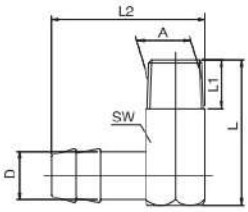

Part No.	A	D	L	L1	L2	SW	
V10M8	M8x0,75	10	27	9	39,5	15	25
V10M10	M10x1	10	27	9	31	11	25
V10R1/8	1/8" BSP	10	24	10	32,5	10	25
V10R1/4	1/4" BSP	10	30	11	38,5	12	25
V13R1/4	1/4" BSP	13	30	10	38,5	13	25
V13M14	M14x1,5	13	34	11	42	17	10
V13R3/8	3/8" BSP	13	37	11	44	19	25
V19M24	M24x1,5	19	47	12	56	24	10
V19R1/2	1/2" BSP	19	47	15	58,5	24	10

Double Nipple with Taper Thread

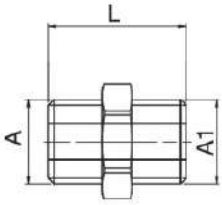

Part No.	A	A1	L	SW	
EC02/02	1/8"	1/8"	23	10	10
EC04/04	1/4"	1/4"	29	14	10
EC06/06	3/8"	3/8"	29	17	10
EC08/08	1/2"	1/2"	35	21	10
EC12/12	3/4"	3/4"	37	27	10
EC16/16	1"	1"	43	34	10
EC20/20	1.1/4"	1.1/4"	46	42	10
EC24/24	1.1/2"	1.1/2"	46	50	10

Double Union Nipple

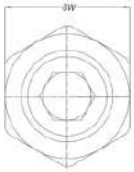

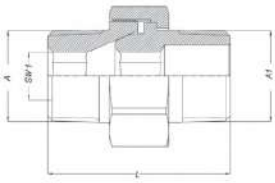

Part No.	A	A1	L	SW	SW1	
DU1/8	1/8" BSPT	1/8" BSPT	27	15	5	10
DU1/8-1/4	1/8" BSPT	1/4" BSPT	30	15	5	10
DU1/4	1/4" BSPT	1/4" BSPT	33,4	19	6	10
DU1/4-3/8	1/4" BSPT	3/8" BSPT	34,1	19	6	10
DU3/8	3/8" BSPT	3/8" BSPT	37	22	8	10
DU1/2	1/2" BSPT	1/2" BSPT	44,4	27	12	10
DU3/4	3/4" BSPT	3/4" BSPT	53	36	14	10
DU1	1" BSPT	1" BSPT	59	50	19	10
DU1-1/4	1-1/4" BSPT	1-1/4" BSPT	68	60	22	10
DU1-1/2	1-1/2" BSPT	1-1/2" BSPT	75	70	24	10

Material: Brass
3-part connector self sealing, Ideal for positioning and connecting non-rotatable parts.

Reducer Nipple

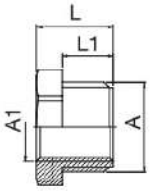

Part No.	A	A1	L	L1	SW	
GR1/4-R1/8	G 1/4"	G 1/8"	11	7	17	10
GM14-M10	M14x1,5	M10X1	11	7	17	10
GR3/8-R1/4	G 3/8"	G 1/4"	13	9	19	10
GM18-M14	M18x1,5	M14x1,5	14	9	22	10
GR1/2-R3/8	G 1/2"	G 3/8"	18	12	24	10
GR3/4-R1/2	G 3/4"	G1/2"	24	16	27	10
GM24-M16	M24x1,5	M16x1,5	24	16	27	10
GR1/1-R3/4*	G 1"	G 3/4"	28	19	34	1
GR11/2-R3/4*	G 1-1/2"	G 3/4"	32	22	50	1
GR11/2-R1/1*	G 1-1/2"	G 1"	32	22	50	1

* Without sealant coating.

Double Nipple with Parallel Thread

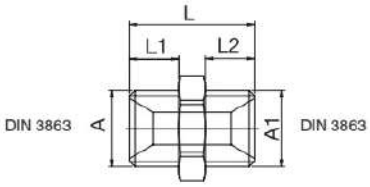

Part No.	A	A1	L	L1	L2	SW	
ZR1/8	G 1/8	G 1/8	21	8	8	17	10
ZM14	M14x1,5	M14x1,5	23	9	9	17	10
ZM14-R1/4	M14x1,5	G 1/4	23	9	9	17	10
ZR1/4	G 1/4	G 1/4	23	9	9	17	10
ZR1/4-R3/8	G 1/4	G 3/8	23	9	9	19	10
ZM16	M16x1,5	M16x1,5	23	9	9	19	10
ZM16-R3/8	M16x1,5	G 3/8	23	9	9	19	10
ZR3/8	G 3/8	G 3/8	23	9	9	19	10
ZR3/8-R1/2	G 3/8	G 1/2	29	9	12	24	10
ZR1/2-M14	G 1/2	M14x1,5	27	12	9	22	10
ZR1/2-M16	G 1/2	M16x1,5	27	12	9	22	10
ZR1/2	G 1/2	G 1/2	30	12	12	24	10
ZR1/2-R3/4	G 1/2	G 3/4	36	12	16	32	10
ZR1/2-R1/1	G 1/2	G 1	40	12	16	36	10
ZM24-R1/2	M24x1,5	G 1/2	36	16	12	27	10
ZR3/4	G 3/4	G 3/4	40	16	16	32	10
ZR3/4-M24	G 3/4	M24x1,5	40	16	16	32	10
ZR3/4-R1/1	G 3/4	G 1	40	16	16	36	10
ZR1/1-R1/1	G 1	G 1	42	16	16	36	10

Converter Nipple

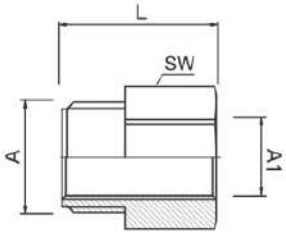

Part No.	A	A1	L	SW	
CN1/8-1/8	G 1/8	G 1/8	16	11	10
CN1/8-1/4	G 1/8	G 1/4	19	17	10
CN1/4-1/8	G 1/4	G 1/8	18	17	10
CN1/4-1/4	G 1/4	G 1/4	21	17	10
CN1/4-3/8	G 1/4	G 3/8	21	19	10
CN3/8-1/4	G 3/8	G 1/4	21	17	10
CN3/8-3/8	G 3/8	G 3/8	21	19	10
CN3/8-1/2	G 3/8	G 1/2	24	24	10
CN1/2-3/8	G 1/2	G 3/8	24	22	10
CN1/2-1/2	G 1/2	G 1/2	25	24	10
CN1/2-3/4	G 1/2	G 3/4	31	32	10

Female Connection Nipple

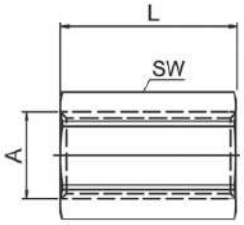

Part No.	A	L	SW	
FN1/8	G 1/8	22	11	10
FN1/4	G 1/4	26	17	10
FN3/8	G 3/8	26	22	10
FN1/2	G 1/2	30	27	10
FN3/4	G 3/4	36	32	10
FN1/1	G 1	40	41	10

Adaptor Nipple BSPP - NPT

Part No.	BSPP	NPT	
BN1/8	1/8"	1/8"	10
BN1/4	1/4"	1/4"	10
BN3/8	3/8"	3/8"	10

Material: Brass (Nickel Plated).

Adaptor Nipple NPT - BSPP

Part No.	BSPP	NPT	
NB1/8	1/8"	1/8"	10
NB1/4	1/4"	1/4"	10
NB3/8	3/8"	3/8"	10
NB1/2	1/2"	1/2"	10

Material: Brass (Nickel Plated).

Female Reduction Nipple

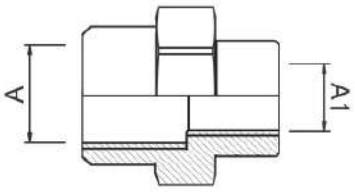

Part No.	A1	A	
FFN1/4-3/8	G1/4"	G3/8"	10
FFN1/4-1/2	G1/4"	G1/2"	10
FFN3/8-1/2	G3/8"	G1/2"	10
FFN1/2-3/4	G1/2"	G3/4"	5
FFN3/4-1	G3/4"	G1"	1

Material: Brass (Nickel Plated).

Elbow - Connector

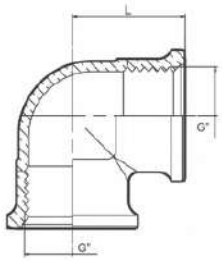

Part No.	G	L	
EL-1/2	1/2"	24,5	1
EL-3/4	3/4"	30	1
EL-1	1"	36	1
EL-1-1/4	1.1/4"	42,5	1
EL-1-1/2	1.1/2"	47,5	1

Material: Brass.

T-Connector

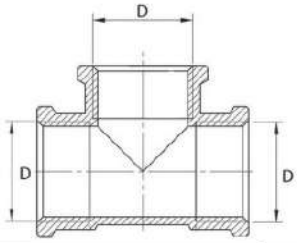

Part No.	D	
FT3/8	G3/8"	10
FT1/2	G1/2"	10
FT3/4	G3/4"	10
FT1	G1"	5
FT1-1/4	G1.1/4"	1
FT1-1/2	G1.1/2"	1

Material: Brass.

Rotatable Connector

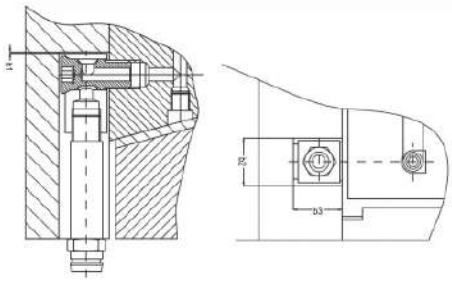

Part No.	Thread	b1	b2	b3	
VS-G1/8	G1/8"	1	16	17,0	1
VS-M10	M10	1	16	17,0	1
VS-G1/4	G1/4"	1	16	23,0	1
VS-M14	M14	1	16	23,0	1
VS-G1/2	G1/2"	1	16	35,5	1

Material: Brass (Nickel Plated).

Barrel Nipple

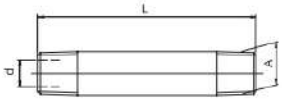

Part No.	A	L	d	
E50R1/8	1/8" BSPT	50	6	10
E100R1/8	1/8" BSPT	100	6	10
E150R1/8	1/8" BSPT	150	6	10
E200R1/8	1/8" BSPT	200	6	10
E50R1/4	1/4" BSPT	50	9	10
E100R1/4	1/4" BSPT	100	9	10
E150R1/4	1/4" BSPT	150	9	10
E200R1/4	1/4" BSPT	200	9	10
E100R3/8	3/8" BSPT	100	12	10
E150R3/8	3/8" BSPT	150	12	10
E200R3/8	3/8" BSPT	200	12	10

Extension Nipple

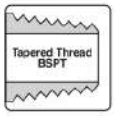

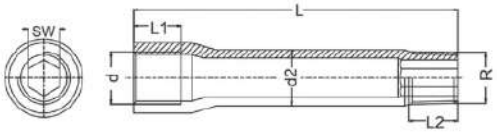

Part No.	d	R	d2	L	L1	L2	SW
EX18050	R1/8	R1/8	10	50	12	10	10
EX18075	R1/8	R1/8	10	75	12	10	10
EX18100	R1/8	R1/8	10	100	12	10	10
EX18125	R1/8	R1/8	10	125	12	10	10
EX14050	R1/4	R1/4	14	50	12	10	10
EX14075	R1/4	R1/4	14	75	12	10	10
EX14100	R1/4	R1/4	14	100	12	10	10
EX14125	R1/4	R1/4	14	125	12	10	10
EX14150	R1/4	R1/4	14	150	12	10	10

Material: Zinc Plated Steel.

Pressure Plug Taper

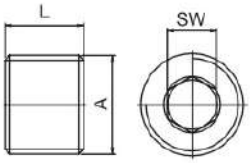

Part No.	A	L	SW	
RM8	M8x0,75	8	4	100
RM10	M10x1	8	5	100
R1/8	1/8" BSPT	8	5	100
RM12	M12x1,5	8	6	100
R1/4	1/4" BSPT	10	7	100
RM14	M14x1,5	10	7	100
R3/8	3/8" BSPT	10	8	100
R1/2	1/2" BSPT	10	10	100

Pressure Plug Parallel

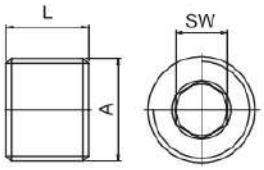

Part No.	A	L	SW	
RM6C	M6x0,75	7	3	100
RM8C	M8x0,75	8	4	100
RM10C	M10x1	8	5	100
R1/8C	1/8" BSP	8	5	100
RM12C	M12x1,5	8	6	100
R1/4C	1/4" BSP	10	7	100
RM14C	M14x1,5	10	7	100
R3/8C	3/8" BSP	10	8	100
R1/2C	1/2" BSP	10	10	100

Hex Plug Parallel

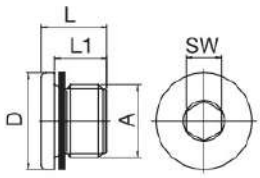

Part No.	A	D	L	L1	SW	
DM10	M10x1	14	11	8	5	25
DR1/8	G 1/8	14	11	8	5	25
DM12	M12x1,5	17	15	12	6	25
DR1/4	G 1/4	18	15	12	6	25
DM14	M14x1,5	19	15	12	6	25
DR3/8	G 3/8	22	15	12	8	25
DR1/2	G 1/2	26	18	14	10	25
DR3/4	G3/4"	32	21	16	12	1
DR1	G1"	40	22,5	16	17	1
DR1-1/2*	G1-1/2"	55	22,5	16	24	1

* With O-ring.

Channel Plug

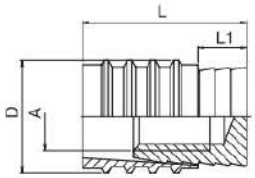

Part No.	A	D	L	L1	
S6	M3	6	11,5	3,5	25
S8	M4	8	11,5	3,5	25
S10-1	M6	10	14	4	25
S12	M6	12	14	4	25
S16	M8	16	16	4	25

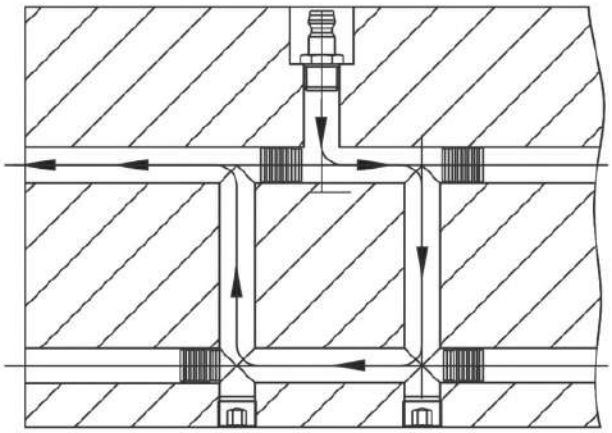

Channel Plug

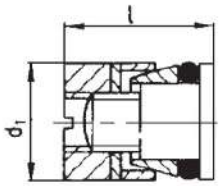

Part No.	d1	Length	
KN105-6	6	10	10
KN105-8	8	11	10
KN105-10	10	11	10
KN105-12	12	11	10
KN105-14	14	13	10
KN105-16	16	13	10

Material: Brass.
O-ring FKM.

Channel Pressure Plug, Threadless

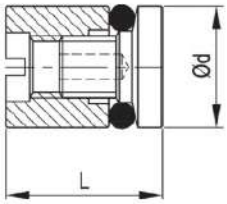

Part No.	L	d	Channel Bore d H13	Installation Key	
CP6	15	6	6	CPT6-..	10
CP8	15	8	8	CPT8-..	10
CP10	15	10	10	CPT10-..	10
CP12	15	12	12	CPT12-..	10

Material: Brass.
O-ring: FKM.

Installation Tool, with Plug Extractor

Part No.	Length	Plug diameter	
CPT6-150	150	6	1
CPT6-300	300	6	1
CPT8-150	150	8	1
CPT8-300	300	8	1
CPT10-150	150	10	1
CPT10-300	300	10	1
CPT12-150	150	12	1
CPT12-300	300	12	1

Mini Ball Valve - Male / Female

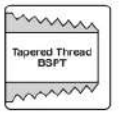

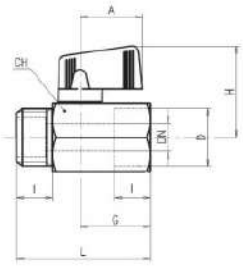

Part No.	Part No.	D	DN	I	L	G	A	H	CH
VMMF02R	VMMF02B	1/8"	5	10	41,5	22	22,5	31	21
VMMF04R	VMMF04B	1/4"	8	11	41,5	22	22,5	31	21
VMMF06R	VMMF06B	3/8"	8	11	41,5	22	22,5	31	21
VMMF08R	VMMF08B	1/2"	10	13	49	22	22,5	31	25

Mini Ball Valve - Female / Female

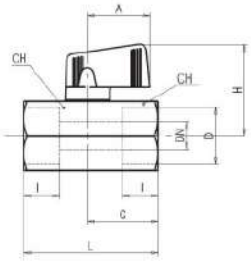

Part No.	Part No.	D	DN	I	L	G	A	H	CH
VM02R	VM02B	1/8"	6	10	41,5	22	22,5	31	21
VM04R	VM04B	1/4"	8	11	41,5	22	22,5	31	21
VM06R	VM06B	3/8"	8	11	41,5	22	22,5	31	21
VM08R	VM08B	1/2"	10	13	49	26	22,5	31	25

Quality:
- Dual sealing system allows valve to be operated in either direction making installation easier.
- No metal-to-metal moving parts.
- No maintenance ever required.
- Handle clearly shows ball position.
- Silicone-free lubricant on all seals.
- Chrome plated brass ball for longer life.
- Each valve is seal tested for maximum safety.

Body:
- One piece drawn sand blasted brass body with an extreme compact design.
- Finest brass according to EN 12164 specification.
- Patent n. 7011-B/89.

Thread:
- ISO 7/1, BS21 Male thread: BSPT – Female thread: BSPP.

Stem:
- Blowout-proof brass stem with FPM O-ring.

Handle:
- Metal Handle removable with valve in service.

Seals:
- Pure PTFE self-lubricating seats with flexible-lip design.

Working Pressure:
- 30 Bar (450 PSI).

Operating Temperature:
- +120°C (+248°F).

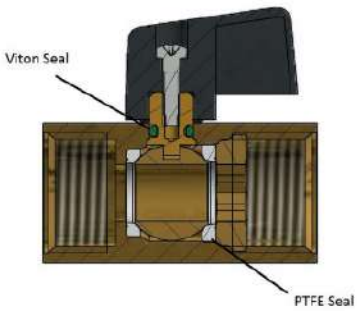

Ball Valve T-handle - Male / Female

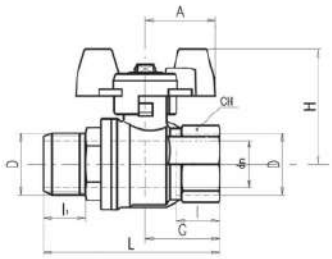

Part No.	Part No.	D	DN	I	I1	L	G	A	H	CH
VTMF04R	VTMF04B	1/4"	8	12	13,5	56,5	22,5	25	39	20
VTMF06R	VTMF06B	3/8"	9,5	12	13,5	56,5	22,5	25	39	20
VTMF08R	VTMF08B	1/2"	15	15,5	16,5	70	29,5	25	43	25
VTMF12R	VTMF12B	3/4"	19	17	18	76,5	32	30	49	31
VTMF16R	VTMF16B	1"	24	21	22	92,5	40,5	30	53	40
VTMF20R	VTMF20B	1-1/4"	30	23	24	106	46,5	57	84,5	49
VTMF24R	VTMF24B	1-1/2"	38	23	24	113	51	57	90,5	54

Quality:
- 24h 100% seal test guaranteed.
- Dual sealing system allows valve to be operated in either direction making installation easier.
- No maintenance ever required.
- Chrome plated brass ball for longer life.
- Travel stops on body to avoid stresses at stem.

Body:
- Hot forged sand blasted, nickel plated brass body and cap sealed with Loctite or equivalent thread sealant.
- Finest brass according to EN 12165 and EN 12164 (formerly DIN 17660 and UNI 5705-65) specifications.

Flow:
- Full port to DIN 3357 for maximum flow .

Thread:
- EN 10226-1, ISO 228 Male thread: BSPT – Female thread: BSPP.

Stem:
- Two FPM O-rings at the stem for maximum safety.

Seals:
- Pure PTFE self-lubricating seats with flexible-lip design .

Working Pressure:
- 40 Bar (600 PSI).
- Non-shock cold working pressure.

Operating Temperature:
- +170°C (+350°F).

Ball Valve T-handle - Female / Female

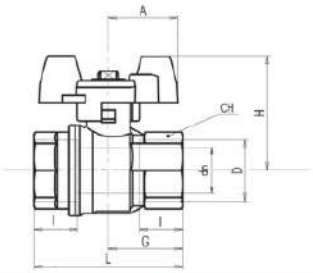

Part No.	Part No.	D	DN	I	L	G	A	H	CH
VT04R	VT04B	1/4"	8	12	45	22,5	25	39	20
VT06R	VT06B	3/8"	9,5	12	45	22,5	25	39	20
VT08R	VT08B	1/2"	15	15,5	59	29,5	25	43	20
VT12R	VT12B	3/4"	19	17	64	32	30	49	31
VT16R	VT16B	1"	24	21	81	40,5	30	53	40
VT20R	VT20B	1-1/4"	30	23	93	46,5	57	84,5	49
VT24R	VT24B	1-1/2"	38	23	102	51	57	90,5	54

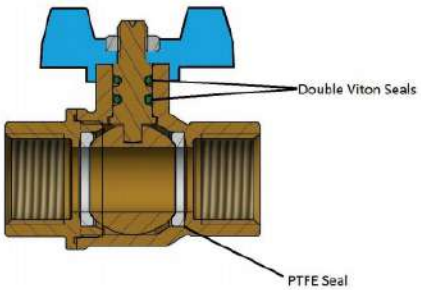

Ball Valve Standard Handle - Male / Female

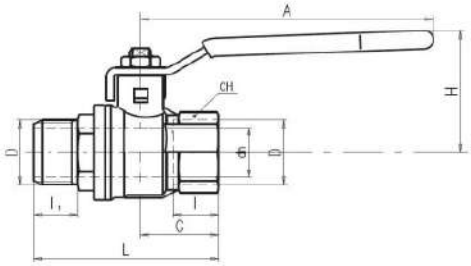

Part No.	Part No.	D	DN	I	I1	L	G	A	H	CH
VLMF04R	VLMF04B	1/4"	8	12	13,5	56,5	22,5	82	38	20
VLMF06R	VLMF06B	3/8"	9,5	12	13,5	56,5	22,5	82	38	20
VLMF08R	VLMF08B	1/2"	15	15,5	16,5	70	29,5	100	43	25
VLMF12R	VLMF12B	3/4"	19	17	18	76,5	32	120	50	31
VLMF16R	VLMF16B	1"	24	21	22	92,5	40,5	120	54	40
VLMF20R	VLMF20B	1-1/4"	30	23	24	106	46,5	158	73	49
VLMF24R	VLMF24B	1-1/2"	38	23	24	113	51	158	79	54

Ball Valve Standard Handle - Female / Female

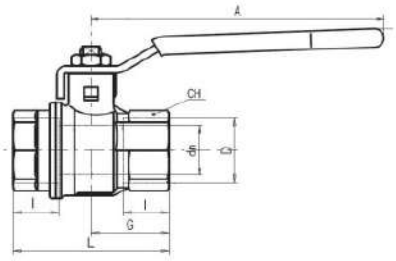

Part No.	Part No.	D	DN	I	L	G	A	H	CH
VL04R	VL04B	1/4"	8	12	45	22,5	82	38	20
VL06R	VL06B	3/8"	9,5	12	45	22,5	82	38	20
VL08R	VL08B	1/2"	15	15,5	59	29,5	100	43	25
VL12R	VL12B	3/4"	19	17	64	32	120	50	31
VL16R	VL16B	1"	24	21	81	40,5	120	54	40
VL20R	VL20B	1-1/4"	30	23	93	46,5	158	73	49
VL24R	VL24B	1-1/2"	38	23	102	51	158	79	54

Quality:
- 24h 100% seal test guaranteed.
- Dual sealing system allows valve to be operated in either direction making installation easier.
- No maintenance ever required.
- Chrome plated brass ball for longer life.
- Travel stops on body to avoid stresses at stem.

Body:
- Hot forged sand blasted, nickel plated brass body and cap sealed with Loctite or equivalent thread sealant.
- Finest brass according to EN 12165 and EN 12164 (formerly DIN 17660 and UNI 5705-65) specifications.

Flow:
- Full port to DIN 3357 for maximum flow.

Thread:
- EN 10226-1, ISO 228 Male thread: BSPT – Female thread: BSPP.

Stem:
- Two FPM O-rings at the stem for maximum safety.

Seals:
- Pure PTFE self-lubricating seats with flexible-lip design.

Working Pressure:
- 40 Bar (600 PSI).
- Non-shock cold working pressure.

Operating Temperature:
- +170°C (+350°F).

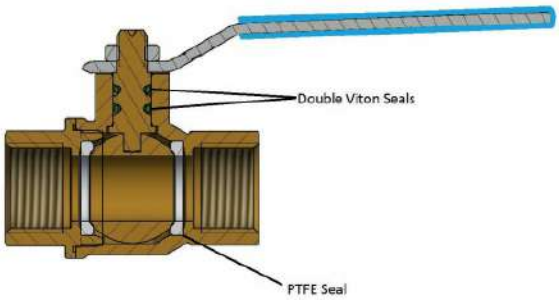

3 Way Ball Valve - Female (L-Type)

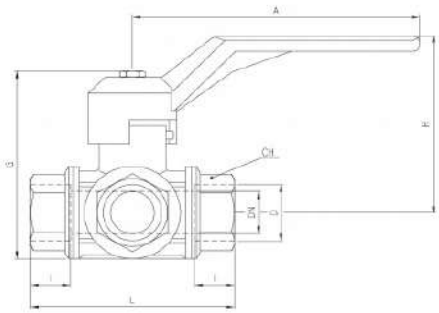

Part No.	D	DN	I	L	G	A	H	CH
V3F04R	1/4"	10	19	77	75	125	65	22
V3F06R	3/8"	12	19	77	75	125	65	22
V3F08R	1/2"	14	19	77	75	125	65	27
V3F12R	3/4"	18	23	92	91	145	83	34
V3F16R	1"	23	25	104	105	170	96	41
V3F20R	1.1/4"	29	27	118	115	170	102	50
V3F24R	1.1/2"	36	31	138	128	170	109	57

Quality:
- Chrome plated brass ball for longer life.
- UNI 8858 cycle and troque test performed.

Body:
- Hot forged sand blasted nickel plated body and caps.
- 3 Way Lever design allows complete range of flow handling applications.
- Copper alloy brass according to EN 12165 and EN 12164 specifications.

Stem:
- Two NBR O-Rings at the stem for maximum safety .

Seals:
- Four seats design limits mixure amoung various fluids in the system.
- PTFE seals.

Threads:
- ISO 228 female threads.

Flow:
- Full port for lowest pressure drops.

Working pressure:
- 20 Bar.

Working temperature:
- -10°C to + 120°C.

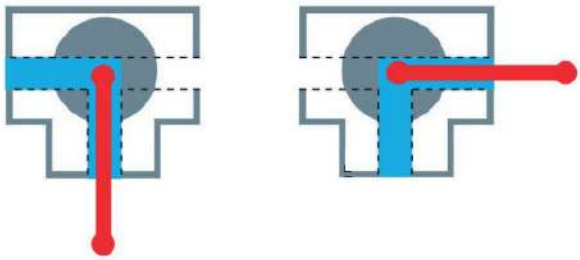

L Type

Ball Valve with Integrated Filter

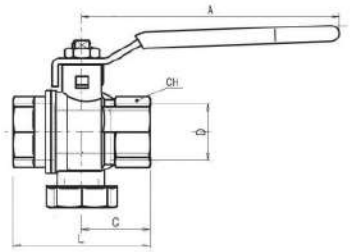

Part No.	D	L	G	A	CH
BVF1/2	1/2"	50,7	26,7	100	25
BVF3/4	3/4"	61,3	32,3	100	31
BVF1	1"	70,1	35,6	100	38
BVF1-1/4	1.1/4"	85	45	158	48
BVF1-1/2	1.1/2"	97,5	52	158	54
BVF2	2"	117	63	158	66

Ball Valve with Integrated Filter and Magnet

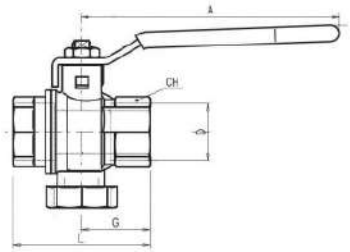

Part No.	D	L	G	A	CH
BVFM3/4	3/4"	61,3	32,3	100	31
BVFM1	1"	70,1	35,6	100	38
BVFM1-1/4	1.1/4"	85	45	158	48
BVFM1-1/2	1.1/2"	97,5	52	158	54
BVFM2	2"	117	63	158	66

Quality:
- Substitutes 3 different components (2 ball valves and one filter)
- Reduces leakage risks due to lower sealing points
- Cost saving due to reduced number of components
- Time saving at installation and maintenance
- Built-in vertical filter with cartridge structure in AISI304 + Nylon (filtration degree: 500 microns / 35 mesh). Size ½" has a central rib to ease filter extraction.
- Final test conforming with UNI EN 12266-1 points A3 / A4 (for 1.½" and 2" sizes: acc. to directive 2014/68/UE)
- No metal-to-metal moving parts
- Handle clearly shows ball position
- Chrome plated brass ball for longer life
- Handle stop on body to avoid stress at stem

Body
- Hot forged sand blasted, external nickel plated brass body and cap sealed with L octite® or equivalent thread sealant
- Finest brass according to EN 12165 and EN 12164 (formerly DIN 17660 and UNI 5705-65) specifications
- Bottom plug for an easy filter maintenance

Stem
- Blowout-proof unplated brass stem
- Two O-rings at the stem (FKM + NBR) for maximum safety

Sealing
- Pure PTFE seats

Threads
- ISO 228 parallel female by female threads

Flow
- Nominal port

Handle
- Zinc plated steel handle with plastic dip coating
- WARNING: do not exceed reasonable temperature and/or electrical load

Magnet
- Neodymium (12.000 gauss) NdFeB

Working pressure & temperature
- 30 Bar (450 PSI) non-shock cold working pressure for sizes ½" to 1", 20 Bar (290 PSI) for sizes 1.¼" to 2"
- -20°C / +150°C (-4°F / +300°F)
- WARNING: freezing of the fluid in the installation may severely damage the valve

PED directive
- According to 2014/68/UE, 1.¼" and superior sizes cannot be used with dangerous fluids

Cost Saving Solution

BVF Filter Valve substitues traditional Y Strainers combined with 2 ball valves.

- Full port
- Low pressure drop
- Assembly space and time very limited
- Easy to be cleaned and maintained
- All impurities gather inside the filter
- Maximum pressure 30 bar (PN30)
- Increased filter quality with cartridge structure for all sizes. Filter for size 1/2" will have a central rib to ease filter extraction

PUSH IN FITTINGS

Straight Male Push-In Fitting

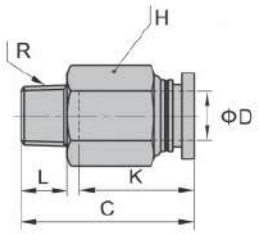

Part No.	Part No.	D	R	L	K	C	H
MSM081/8R	MSM081/8B	8	1/8"	7,5	18,5	27	14
MSM081/4R	MSM081/4B	8	1/4"	10	18,5	25	14
MSM083/8R	MSM083/8B	8	3/8"	9	18,5	23,5	17
MSM101/4R	MSM101/4B	10	1/4"	10	19	30	17
MSM103/8R	MSM103/8B	10	3/8"	10	19	25	17
MSM123/8R	MSM123/8B	12	3/8"	11	20	26	21
MSM121/2R	MSM121/2B	12	1/2"	13	20	26	21

Material: Brass, Nickel Plated. Seal: EPDM.

90° Male Push-In Fitting

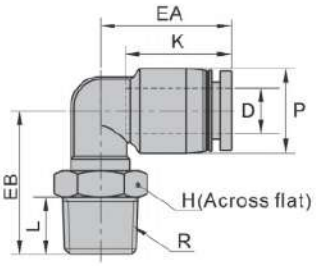

Part No.	Part No.	D	R	L	K	EB	EA	P	H
MSW081/8R	MSW081/8B	8	1/8"	7,5	18,5	24	25	14	12
MSW081/4R	MSW081/4B	8	1/4"	10	18,5	25	25	14	14
MSW083/8R	MSW083/8B	8	3/8"	10	18,5	27	25	14	17
MSW101/4R	MSW101/4B	10	1/4"	10	19	28	27	16	14
MSW103/8R	MSW103/8B	10	3/8"	10	19	28	25,5	16	17
MSW123/8R	MSW123/8B	12	3/8"	10	21	31	28,5	19	17
MSW121/2R	MSW121/2B	12	1/2"	14	21	34	31	19	21

Material: Brass, Nickel Plated. Seal: EPDM.

Straight Female Push-In Fitting

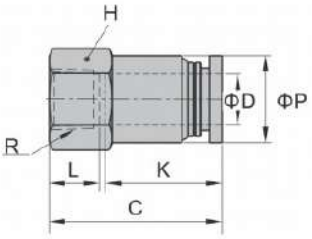

Part No.	Part No.	D	R	L	K	C	H	P
MSF081/8R	MSF081/8B	8	1/8"	8	18	28,3	14	14
MSF081/4R	MSF081/4B	8	1/4"	11	18	30,5	17	14
MSF083/8R	MSF083/8B	8	3/8"	12	18	31,5	19	14
MSF101/4R	MSF101/4B	10	1/4"	11	19	30,5	17	16
MSF103/8R	MSF103/8B	10	3/8"	12	19	33	19	16
MSF123/8R	MSF123/8B	12	3/8"	12	20	33,5	19	19
MSF121/2R	MSF121/2B	12	1/2"	13,5	21	37	24	19

Material: Brass, Nickel Plated. Seal: EPDM.

Ether Based Polyurethane Tubing for Push-In Fittings - Temperature max 70°C / Peak 100°C

Part No.	Description	D (mm)	D1 (mm)	Working Pressure* PSI	Working Pressure* Bar	Bend Radius (mm)*	Coil Length L	Colour
PPU8B	Pneumatic Polyurethane Tubing 8mm x 5.5mm	8	5.5	116	8	31	30m	
PPU8R	Pneumatic Polyurethane Tubing 8mm x 5.5mm	8	5.5	116	8	31	30m	
PPU10B	Pneumatic Polyurethane Tubing 10mm x 7mm	10	7	116	8	40	30m	
PPU10R	Pneumatic Polyurethane Tubing 10mm x 7mm	10	7	116	8	40	30m	
PPU12B	Pneumatic Polyurethane Tubing 12mm x 8mm	12	8	116	8	43	30m	
PPU12R	Pneumatic Polyurethane Tubing 12mm x 8mm	12	8	116	8	43	30m	

* Working pressure of 8 bar / 116 PSI is based on temperature of 20°C, higher temperature will result in lower pressure resistance. See below graph for details.

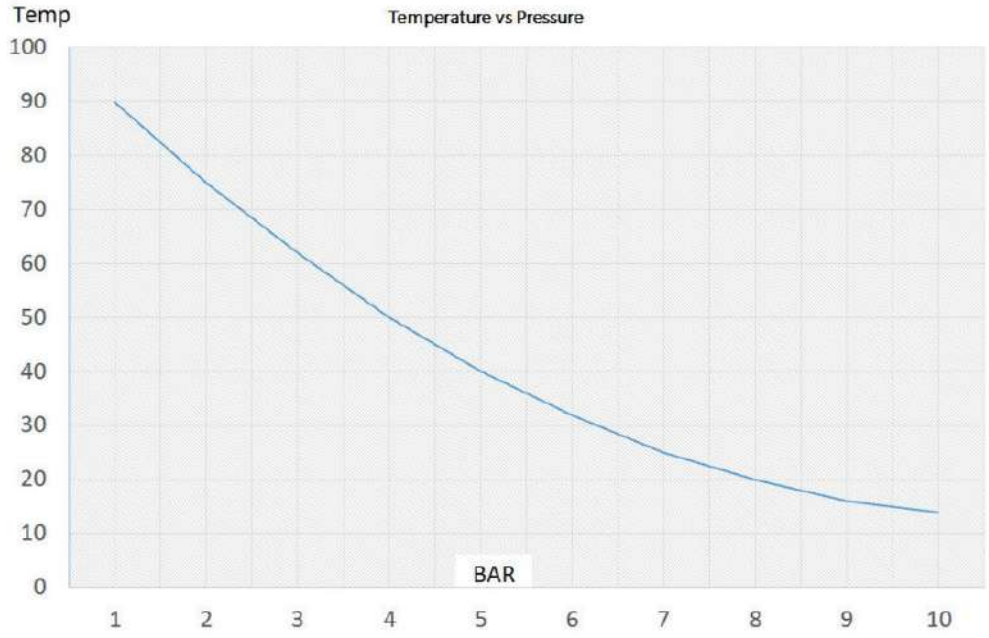

MANIFOLDS

3/4" Inline Anodized Manifold

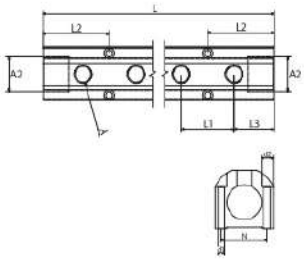

Part No.	Colour	Ports	A (BSPP)	A2 (BSPP)	L2	L3	L1	d1	d2	N	L
IM3-4-1/4-R		4	1/4"	3/4"	57,2	38,1	38,1	4,5	8	31	190,5
IM3-4-1/4-B		4	1/4"	3/4"	57,2	38,1	38,1	4,5	8	31	190,5
IM3-6-1/4-R		6	1/4"	3/4"	57,2	38,1	38,1	4,5	8	31	266,7
IM3-6-1/4-B		6	1/4"	3/4"	57,2	38,1	38,1	4,5	8	31	266,7
IM3-8-1/4-R		8	1/4"	3/4"	57,2	38,1	38,1	4,5	8	31	342,9
IM3-8-1/4-B		8	1/4"	3/4"	57,2	38,1	38,1	4,5	8	31	342,9

Rugged Low Cost Design.
Anodized Aluminium in Blue or Red for easy identification of Flow and Return.
Quick Mould Change.
Eliminates Piping Errors.
Shorter Hose Lengths minimise pressure drops and reduces clutter.
Maximum Unresticted Flow Rates Possible.

1" Inline Anodized Manifold

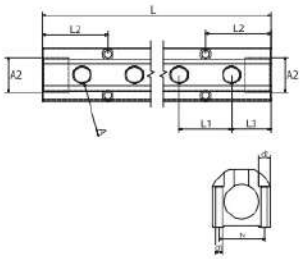

Part No.	Colour	Ports	A (BSPP)	A2 (BSPP)	L2	L3	L1	d1	d2	N	L
IM4-4-1/4-R		4	1/4"	1"	63,5	38,1	38,1	7	10,5	40,6	190,5
IM4-4-1/4-B		4	1/4"	1"	63,5	38,1	38,1	7	10,5	40,6	190,5
IM4-4-3/8-R		4	3/8"	1"	63,5	38,1	50,8	7	10,5	40,6	228,6
IM4-4-3/8-B		4	3/8"	1"	63,5	38,1	50,8	7	10,5	40,6	228,6
IM4-6-1/4-R		6	1/4"	1"	63,5	38,1	38,1	7	10,5	40,6	266,7
IM4-6-1/4-B		6	1/4"	1"	63,5	38,1	38,1	7	10,5	40,6	266,7
IM4-6-3/8-R		6	3/8"	1"	63,5	38,1	50,8	7	10,5	40,6	330,2
IM4-6-3/8-B		6	3/8"	1"	63,5	38,1	50,8	7	10,5	40,6	330,2
IM4-8-1/4-R		8	1/4"	1"	63,5	38,1	38,1	7	10,5	40,6	342,9
IM4-8-1/4-B		8	1/4"	1"	63,5	38,1	38,1	7	10,5	40,6	342,9
IM4-8-3/8-R		8	3/8"	1"	63,5	38,1	50,8	7	10,5	40,6	431,8
IM4-8-3/8-B		8	3/8"	1"	63,5	38,1	50,8	7	10,5	40,6	431,8
IM4-10-3/8-R		10	3/8"	1"	63,5	38,1	50,8	7	10,5	40,6	533,4
IM4-10-3/8-B		10	3/8"	1"	63,5	38,1	50,8	7	10,5	40,6	533,4
IM4-12-3/8-R		12	3/8"	1"	63,5	38,1	50,8	7	10,5	40,6	635,0
IM4-12-3/8-B		12	3/8"	1"	63,5	38,1	50,8	7	10,5	40,6	635,0

Rugged Low Cost Design.
Anodized Aluminium in Blue or Red for easy identification of Flow and Return.
Quick Mould Change.
Eliminates Piping Errors.
Shorter Hose Lengths minimise pressure drops and reduces clutter.
Maximum Unresticted Flow Rates Possible.

1-1/2" Inline Anodized Manifold

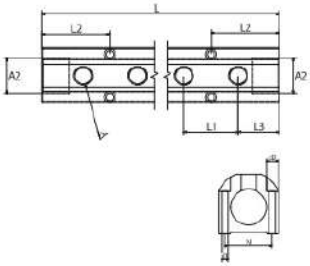

Part No.	Colour	Ports	A (BSPP)	A2 (BSPP)	L2	L3	L1	d1	d2	N	L
IM6-4-1/2-R		4	1/2"	1-1/2"	76,2	50,8	50,8	7	10,5	57	254
IM6-4-1/2-B		4	1/2"	1-1/2"	76,2	50,8	50,8	7	10,5	57	254
IM6-6-1/2-R		6	1/2"	1-1/2"	76,2	50,8	50,8	7	10,5	57	355,6
IM6-6-1/2-B		6	1/2"	1-1/2"	76,2	50,8	50,8	7	10,5	57	355,6
IM6-8-1/2-R		8	1/2"	1-1/2"	76,2	50,8	50,8	7	10,5	57	457,2
IM6-8-1/2-B		8	1/2"	1-1/2"	76,2	50,8	50,8	7	10,5	57	457,2
IM6-10-1/2-R		10	1/2"	1-1/2"	76,2	50,8	50,8	7	10,5	57	558,8
IM6-10-1/2-B		10	1/2"	1-1/2"	76,2	50,8	50,8	7	10,5	57	558,8
IM6-12-1/2-R		12	1/2"	1-1/2"	76,2	50,8	50,8	7	10,5	57	660,4
IM6-12-1/2-B		12	1/2"	1-1/2"	76,2	50,8	50,8	7	10,5	57	660,4

Rugged Low Cost Design.
Anodized Aluminium in Blue or Red for easy identification of Flow and Return.
Quick Mould Change.
Eliminates Piping Errors.
Shorter Hose Lengths minimise pressure drops and reduces clutter.
Maximum Unresticted Flow Rates Possible.

Blanking Plugs

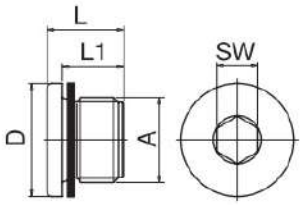

Part No.	A	D	L	L1	SW	
DR3/4	G3/4"	32	21	16	12	1
DR1	G1"	40	22,5	16	17	1
DR1-1/2*	G1-1/2"	55	22,5	16	24	1

* With O-Ring.

MANIFOLDS

Inline Stainless Steel Manifold

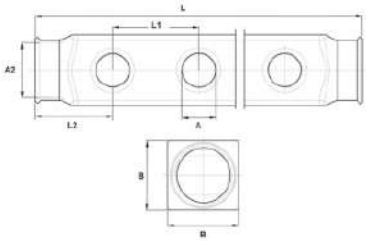

Part No.	Ports	A (BSPP)	A2 (BSPP)	L	L1	L2	B
SSIM4-4-1/2	4	1/2"	1"	240	50	45	40
SSIM4-6-1/2	6	1/2"	1"	340	50	45	40
SSIM4-8-1/2	8	1/2"	1"	440	50	45	40
SSIM4-10-1/2	10	1/2"	1"	540	50	45	40
SSIM4-12-1/2	12	1/2"	1"	640	50	45	40
SSIM5-4-1/2	4	1/2"	1-1/4"	240	50	45	50
SSIM5-6-1/2	6	1/2"	1-1/4"	340	50	45	50
SSIM5-8-1/2	8	1/2"	1-1/4"	440	50	45	50
SSIM5-10-1/2	10	1/2"	1-1/4"	540	50	45	50
SSIM5-12-1/2	12	1/2"	1-1/4"	640	50	45	50

Stainless steel AISI 304.
Perfect for agressive water and oil.

Max. pressure 10 bar.
Max temp. 200°C.

Brackets for Stainless Steel Manifolds

Part No.	Type	
SS-Bracket	1"	1
SS-5-Bracket	1-1/4"	1

Electro plated steel bracket for installation of a single manifold.
2 Brackets needed for correct installation.

Equal Connector for Stainless Manifolds

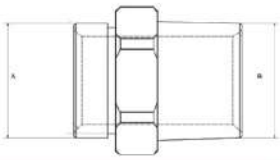

Part No.	Part No.	A	B
ECM1	1" BSPP	1" BSPT	1
ECM1-1/4	1-1/4" BSPP	1-1/4" BSPT	1

Material: Brass Nickel Plated.
Max temp.: 130°C.

O-Ring: 1" = EPDM.
1-1/4" = SILICONE.

Blanking Plug

Part No.	Thread	Seal
SSEC1	1"	FKM max. temp. 200°C
SSEC1-1/4	1-1/4"	FKM max. temp. 200°C

Material: Nickel plated brass

Heavy Duty Inline Stainless Steel Manifold

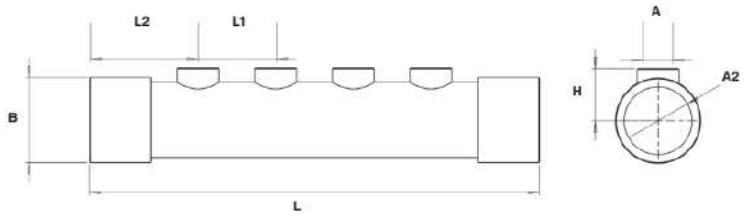

Part No.	Ports	A (BSPP)	A2 (BSPP)	L	L1	L2	B	H
SSIM6-4-1/2	4	1/2"	1.1/2"	290	50	69,5	55	34
SSIM6-8-1/2	8	1/2"	1.1/2"	490	50	69,5	55	34
SSIM6-12-1/2	12	1/2"	1.1/2"	690	50	69,5	55	34

Welded pipe construction
Stainless Steel AISI 304
Perfect for aggressive water and oil

Max. pressure 10 bar.
Max temp. 200°C.

Brackets for heavy duty Stainless Steel Manifolds

Part No.	Size	
SS-6-Bracket	1.1/2"	1

Electro plated steel bracket for installation of a single manifold
2 Brackets needed for correct installation

Blanking Plugs

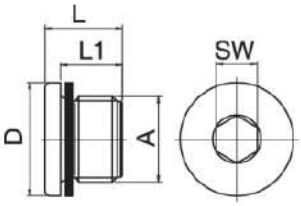

Part No.	A	D	L	L1	SW	
DR1-1/2*	G1-1/2" BSP	55	22,5	16	24	1

Material: Plated Brass
With O-ring

SEALANT AND TAPE

PTFE Tape

Part No.	Size	Length
TEF	12 mm	12 m

Excellent for sealing all thread sizes.
Temperature range: up to 230°C.

Thread Locker

Part No.	Size	Max Thread	Temperature range
77	50 ml.	< M80	-50°C - +150°C

Anaerobic Thread locker for permanent sealing of metal threaded fittings.
Single component, liquid adhesive that cures hard in the absence of air or oxygen.
Maximum Thread Size: M80.
Disassembly strength: High.
Temperature range: -50°C - +150°C.
Breakaway torque: 32 Nm.
Pack sizes: 50ml.

Pipe Sealant

Part No.	Size	Max Thread	Temperature range
542	50 ml.	< 3/4"	-50°C - +150°C

Anaerobic thread sealant for fine metal threaded fittings, especially hydraulic pipes.
Single component, liquid adhesive that cures hard in the absence of air or oxygen.
Maximum pipe size: 3/4".
Disassembly strength: Medium.
Temperature range: -50°C - +150°C.
Breakaway torque: 15 Nm.
Pack sizes: 50ml.

Pipe Sealant

Part No.	Size	Max Thread	Temperature range
577	50 ml.	< 3"	-50°C - +150°C
577-2	250 ml.	< 3"	-50°C - +150°C

General purpose anaerobic thread sealant for all coarse metal threads.
Single component, liquid adhesive that cures hard in the absence of air or oxygen.
Maximum Pipe Size: 3".
Disassembly strength: Medium.
Temperature range: -50°C - +150°C.
Breakaway torque: 11 Nm.
Pack sizes: 50ml, 250ml.

THERMAL MANAGEMENT

02.

85 DIGITAL FLOW MONITORS

99 ANALOGUE FLOW METERS

101 DE-SCALING

103 PRESSURE TESTING

104 WATER TREATMENT

105 FILTERS

107 VALVES

Flosense; the new affordable, flexible flow monitoring system designed for accurate measuring and monitoring of flow, temperature and pressure variations in cooling circuits

Flosense is designed to be installed in various locations within the cooling circuit including the main water supply, the mould heater, critical cooling channels or distribution manifolds.

Quick to install and easy to set-up, Flosense is a critical component in any injection moulding configuration and should form part of any setup where cost control and quality are key considerations.

Using these values, Flosense provides an indication of the stability of the process and checks the efficiency, identifying wasted energy and variations in pressure which could indicate leaks or blocked waterways.

Flosense is designed to be installed in various locations within the cooling circuit including the main water supply, the mould heater, critical cooling channels or distribution manifolds.

flosense

Pressure loss is caused by hoses, fittings and valves and will affect the productivity.

Difference between inlet pressure and return pressure is measured as Delta P.

Variation in Delta P could indicate pump failure, blocked waterway, leaks etc.

As the cooling water passes through the mould it transfers heat from the steel into the cooling water. The more turbulent the flow the more efficient this process of cooling.

Difference between inlet temperature and return temperature is measured as Delta T.

Sudden variation in Delta T may be caused by a faulty heater/ cooler, blocked channel, scale build up etc.

Flosense, provides visibility of key cooling circuit metrics, improves efficiency, enhances productivity and profitability.

Energy Transfer Indicator
Heat is transfered from the mould through the water channels, Flosense calculates the heat transfer as energy units BTU or kWh. This feature illustrates the effeciency of the process.

Turbolent Flow Indicator
Often regarded as a key indicator in the efficiency of a mould cooling circuit, Flosense is fitted with a turbulent flow indicator. The unit will indicate laminar, transitional and turbulent flow as well as monitoring the Reynolds number, based on flow diameter and percentage glycol in the system.

Improving the flow from laminar to turbulent can increase the heat transfer efficiency by up to 500%.

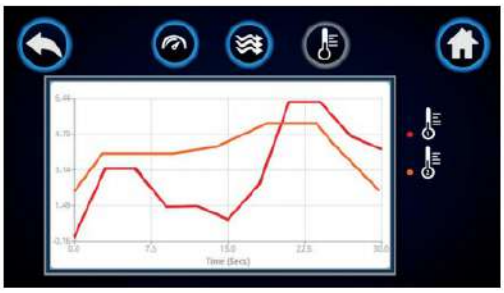

Flosense, provides features and interfaces to monitor, analyse and verify data, essential for your productivity and quality.

Alarm Output
With programmable alarm limits on flow, temperature and pressure any variation in the values being monitored will trigger an on-screen alarm. An external alarm output signal can be connected to auxiliary equipment which could be a visual or audible beacon, the mould heater or the injection moulding machine.

Even in a 'hose burst' situation the unit will identify a sudden loss of pressure and the unit can either be connected to an alarm or could be used to automatically shut down the mould heater.

DATA RECORDING
Data is recorded and stored in the internal memory enough to display data for the previous 30 days.

Flow, Temperature and Pressure are logged and may be viewed in the graphing screen.

The last 30 days of data is recorded and stored on the internal memory.

Data Export
It is also possible to download the data to a laptop using the integrated USB port for further analysis.

The data is stored as text file and can be analysed using excel or other analysing software.

Flow Sensor Kit - 1 or 2 Circuits

NEW: 2 flow circuits from same control

FLOW TEMPERATURE

1 2

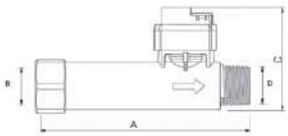

1 Sensor Kit	2 Sensors Kit	Flow capacity l/m	A	B	C	D	Max Temp.
FSE-0510-K	FSE-0510-K-D	0,5-10	100	G 1/2"	58,8	1/4"	120°C
FSE-0510-K-HT	FSE-0510-K-HT-D	0,5-10	100	G 1/2"	58,8	1/4"	160°C
FSE-120-K	FSE-120-K-D	1-20	100	G 1/2"	58,8	1/4"	120°C
FSE-120-K-HT	FSE-120-K-HT-D	1-20	100	G 1/2"	58,8	1/4"	160°C
FSE-240-K	FSE-240-K-D	2-40	100	G 1/2"	58,8	1/4"	120°C
FSE-240-K-HT	FSE-240-K-HT-D	2-40	100	G 1/2"	58,8	1/4"	160°C

- Touch Screen
- Power Supply
- Sensor(s) (flow+temp)
- Cable(s) (1,2 m.)
- USB Cable

Multi Sensor Kit - 1 or 2 Circuits

NEW: 2 flow circuits from same control

PRESSURE FLOW TEMPERATURE

1 2

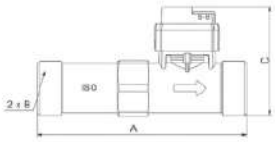

1 Sensor Kit	2 Sensors Kit	Flow capacity l/m	A	Connection B	C	Max Temp.	Pressure Range
FS-115-K	FS-115-K-D	2-20	110	G 3/4"	58,8	120°C	0-10 Bar
FS-240-K	FS-240-K-D	4-40	110	G 3/4"	58,8	120°C	0-10 Bar
FS-5100-K	FS-5100-K-D	10-100	129	G 1"	66,5	120°C	0-10 Bar
FS-10200-K	FS-10200-K-D	20-200	137,5	G 1-1/4"	74,1	120°C	0-10 Bar
FS-20400-K*	FS-20400-K-D*	20-200	180	G 1-1/2"	85	120°C	0-10 Bar

- Touch Screen
- Power Supply
- Sensor(s) (flow+temp+pressure)
- Cable(s) (1,2 m.)
- USB Cable

* Composite (PPS, PA66)

Delta Multi Sensor Kit - 1 Circuit

PRESSURE FLOW TEMPERATURE ΔT ΔP BTU - kWh

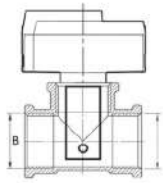

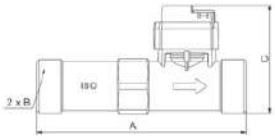

Inlet/outlet Sensor Kit	Flow capacity l/m	A	Connection B	C	Max Temp.	Pressure Range
FS-115-10-K	2-20	110	G 3/4"	58,8	120ºC	0-10 Bar
FS-240-10-K	4-40	110	G 3/4"	58,8	120ºC	0-10 Bar
FS-5100-10-K	10-100	129	G 1"	66,5	120ºC	0-10 Bar
FS-10200-10-K	20-200	137,5	G 1-1/4"	74,1	120ºC	0-10 Bar
FS-20400-10-K*	40-400	180	G 1-1/2"	85	120ºC	0-10 Bar

- Touch Screen
- Power Supply
- Sensor (flow+temp+pressure)
- Inlet Sensor (Temp+pressure)
- 2 x Cables (1,2 m.)
- USB Cable

* Composite (PPS, PA66)

Multi Sensor Unit

PRESSURE
FLOW
TEMPERATURE

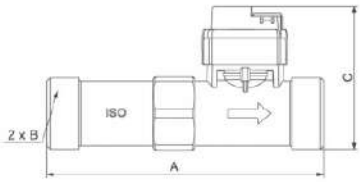

Part No.	Flow capacity l/m	A	B	C	Max temperature	Hosetail Ref.
FS-115	2-20	110	G 3/4"	58,8	120ºC	CFR3/4-13
FS-240	4-40	110	G 3/4"	58,8	120ºC	HT-316-2 / CFR3/4-19
FS-5100	10-100	129	G 1"	66,5	120ºC	CFR1-25 / CFR1-25
FS-10200	20-200	137,5	G 1-1/4"	74,1	120ºC	HT-316-4 / CFR1.1/4-32
FS-20400	40-400	180	G1-1/2"	80,1	120ºC	1.1/2" / 38 mm. (Included)

Includes Flow Pipe and Multi Sensor (cable not included).

Optional (not included in the Kit) AISI 316

Swivel Hosetail Fitings

Gaskets

Stainless Steel Part No.	Brass Part No.	A1 x D1	Sensor Ref.	Part No.
	CFR3/4-13	3/4" X 13	FS-115	GK34
HT-316-2	CFR3/4-19	3/4" X 19	FS-240	GK34
HT-316-3	CFR1-25	1" x 25	FS-5100	GK1
	CFR1.1/4-32	1.1/4 x 32	FS-10200	GK114
	CFR1.1/2-38	1.1/2 x 38	FS-20400	GK112

Flow Sensor Unit

FLOW
TEMPERATURE

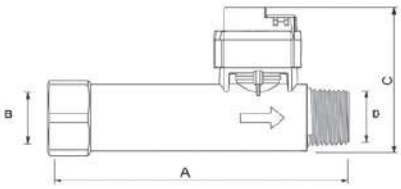

Part No.	Flow capacity l/m	A	B	C	D	Max temperature	B Connection ref.
FSE-0510	0,5-10	100	G 1/2"	58,8	1/4"	120°C	xxNRF
FSE-0510-HT	0,5-10	100	G 1/2"	58,8	1/4"	160°C	xxNRF
FSE-120	1-20	100	G 1/2"	58,8	1/4"	120°C	xxNRF
FSE-120-HT	1-20	100	G 1/2"	58,8	1/4"	160°C	xxNRF
FSE-240	2-40	100	G 1/2"	58,8	1/4"	120°C	xxNRF
FSE-240-HT	2-40	100	G 1/2"	58,8	1/4"	160°C	xxNRF

Includes Flow Pipe and Flow Sensor (cable not included)

Port Connector Plugs

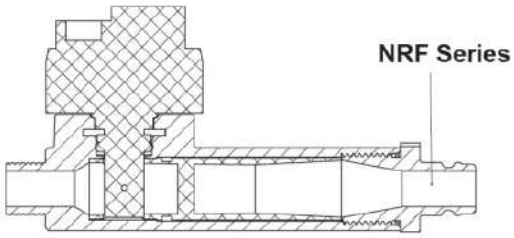

Part No.	Connection	Size/series
09NRF	R 1/2"	09 EURO Style
13NRF	R 1/2"	13 EURO Style
20NRF	R 1/2"	20 Int. Style
30NRF	R 1/2"	30 Int. Style
08NRF	R 1/2"	French Type
F9NRF	R 1/2"	French Matic
06NRF	R 1/2"	06 Scandinavian Style
10MF	R 1/2"	10 mm Hosetail
13MF	R 1/2"	13 mm Hosetail

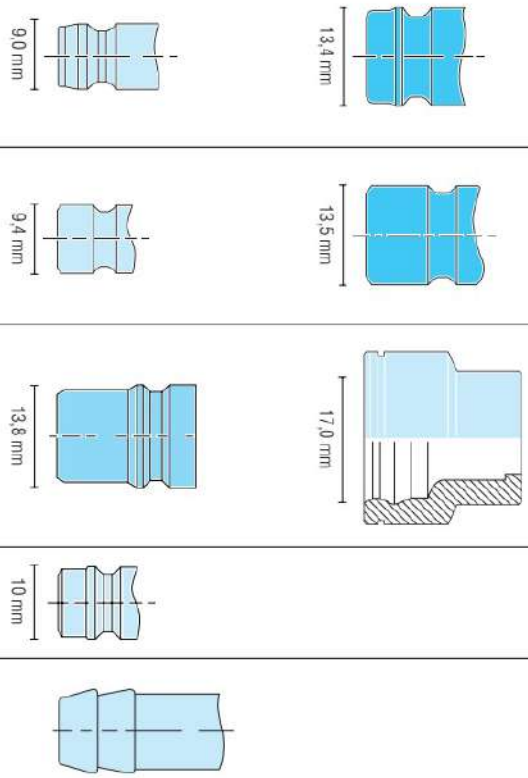

Sensor Cable

Part No.	Connection	Length (mm)
FS-SC1200	M8/Molex	1200
FS-SC2900	M8/Molex	2900
FS-SC1200-GND	M8/Molex	1200
FS-SC2900-GND	M8/Molex	2900

GND Type includes Earth Wire and Sensor Clip Connector

Extension Cable 4 pin

Part No.	Connection	Length (mm)
FS-4P-EC1000	M8/M8	1000
FS-4P-EC2000	M8/M8	2000
FS-4P-EC5000	M8/M8	5000

MULTI ZONE MONITORING

Upgrade your moulding machine with a new digital flow monitor to improve your productivity

Digital flow monitors will give you many advantages such as:

- Digital monitoring of Flow, Temperature and Pressure
- Alarm Output
- Higher flow capacity
- Higher temperature range
- Data storage and export
- Faster Mould changeovers
- OPC-UA / Euromap interface

Flosense 2.0

Manifolds - Retrofit Style

Page 90

Flosense 4.0

Compact Dual Line Manifolds
Integrated Sensors and Valves

Page 91

Flosense 3.0

All in One Flow Regulator Style
Integrated Control Screen

Page 92

Touch Screen

Touch Screen mounted to the Manifolds.

Equipped with power, alarm, USB and Ethernet connections.

Display	
Type	Touch
Size	7,1"
Voltage	12-24 Volt.
Data	USB + Ethernet
Communications	OPC UA
Internal memory	Up to 30 days data (FIFO)

Part No.	Size	Manifold Inputs	Power Connection	Alarm Output	Interface
FS-7100	7.1"	4	12V	Yes	OPC-UA

The main screen will show all circuits with information about flow and temperature. The main inlet and outlet will also show including pressure.

By clicking on a specific circuit you will see detailed information, including delta T (heat transfer) of the specific channel. Also, turbulent flow indicator is included.

Data i stored in the internal memory and can be displayed in graphical view for each circuit. Data can also be exported for external use.

The system is equipped with Audit Log to keep track of all events including user ID tracer.

Flosense 2.0 Manifold

PRESSURE

FLOW

TEMPERATURE

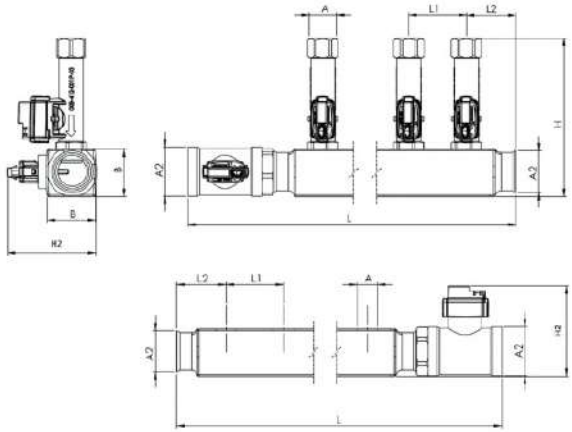

1" Manifold	Flow sensor range option (l/m)												
Part No.	0.5-10	1-20	2-40	Ports	A	A2	B	L	L1	L2	H	H2	Temp.
F2M4-x-xx	•	•	•	4	1/2"	1"	40	315	50	45	140	66,5	120°C
F2M4HT-x-xx	•	•	•	4	1/2"	1"	40	315	50	45	140	66,5	160°C
F2M6-x-xx	•	•	•	6	1/2"	1"	40	415	50	45	140	66,5	120°C
F2M6HT-x-xx	•	•	•	6	1/2"	1"	40	415	50	45	140	66,5	160°C
F2M8-x-xx	•	•	•	8	1/2"	1"	40	515	50	45	140	66,5	120°C
F2M8HT-x-xx	•	•	•	8	1/2"	1"	40	515	50	45	140	66,5	160°C
F2M10-x-xx	•	•	•	10	1/2"	1"	40	615	50	45	140	66,5	120°C
F2M10HT-x-xx	•	•	•	10	1/2"	1"	40	615	50	45	140	66,5	160°C
F2M12-x-xx	•	•	•	12	1/2"	1"	40	715	50	45	140	66,5	120°C
F2M12HT-x-xx	•	•	•	12	1/2"	1"	40	715	50	45	140	66,5	160°C

1.1/4" Manifold	Flow sensor range option (l/m)												
Part No.	0.5-10	1-20	2-40	Ports	A	A2	B	L	L1	L2	H	H2	Temp.
F2M4-L-x-xx	•	•	•	4	1/2"	1.1/4"	50	315	50	45	150	74,1	120°C
F2M4HT-L-x-xx	•	•	•	4	1/2"	1.1/4"	50	315	50	45	150	74,1	160°C
F2M6-L-x-xx	•	•	•	6	1/2"	1.1/4"	50	415	50	45	150	74,1	120°C
F2M6HT-L-x-xx	•	•	•	6	1/2"	1.1/4"	50	415	50	45	150	74,1	160°C
F2M8-L-x-xx	•	•	•	8	1/2"	1.1/4"	50	515	50	45	150	74,1	120°C
F2M8HT-L-x-xx	•	•	•	8	1/2"	1.1/4"	50	515	50	45	150	74,1	160°C
F2M10-L-x-xx	•	•	•	10	1/2"	1.1/4"	50	615	50	45	150	74,1	120°C
F2M10HT-L-x-xx	•	•	•	10	1/2"	1.1/4"	50	615	50	45	150	74,1	160°C
F2M12-L-x-xx	•	•	•	12	1/2"	1.1/4"	50	715	50	45	150	74,1	120°C
F2M12HT-L-x-xx	•	•	•	12	1/2"	1.1/4"	50	715	50	45	150	74,1	160°C

1.1/2" Manifold	Flow sensor range option (l/m)												
Part No.	0.5-10	1-20	2-40	Ports	A	A2	B	L	L1	L2	H	H2	Temp.
F2M4-XL-x-xx	•	•	•	4	1/2"	1.1/2"	50	365	50	70	161,5	85	120°C
F2M4HT-XL-x-xx	•	•	•	4	1/2"	1.1/2"	50	365	50	70	161,5	85	160°C
F2M8-XL-x-xx	•	•	•	8	1/2"	1.1/2"	50	565	50	70	161,5	85	120°C
F2M8HT-XL-x-xx	•	•	•	8	1/2"	1.1/2"	50	565	50	70	161,5	85	160°C
F2M12-XL-x-xx	•	•	•	12	1/2"	1.1/2"	50	765	50	70	161,5	85	120°C
F2M12HT-XL-x-xx	•	•	•	12	1/2"	1.1/2"	50	765	50	70	161,5	85	160°C

Comes in pairs of 2 manifolds
- One feed Manifold with Pressure and Tempature Sensor
- One return Manifold with Flow, Temperature and Pressure Sensor

Supplied without connector nipples (see page 93)
Ordering Example: Part No. + Flow sensor range (F2M4-1-20)

HT = High Temperature.
Complete unit with Pressure sensor installed on main inlet / return. Connect up to 4 manifolds to the touch screen in order to monitor uo to 48 separate cooling circuits.
Use the alarm limits (and output) on flow and temperature to control the process stability and part quality.

Material:
Stainless Steel

Flosense 4.0 Manifold

PRESSURE
FLOW
TEMPERATURE

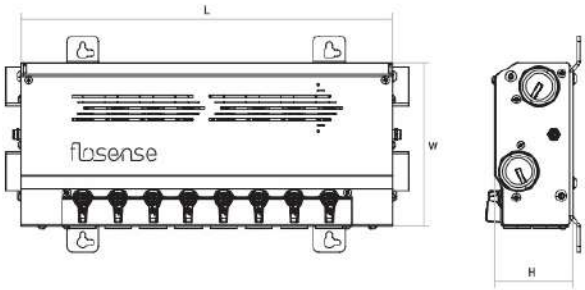

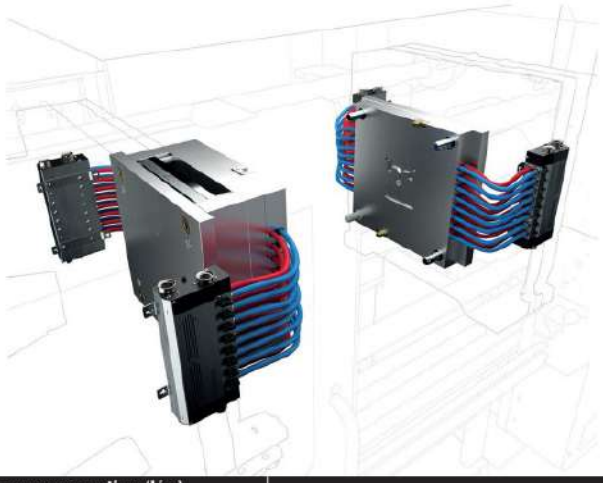

	Flow sensor range option (l/m)							
Part No.	0.5-10	1-20	2-40	Ports	L	W	H	Temp.
F4M4-x-xx	•	•	•	4	220	155	72	120°C
F4M4HT-x-xx	•	•	•	4	220	155	72	160°C
F4M6-x-xx	•	•	•	6	287	155	72	120°C
F4M6HT-x-xx	•	•	•	6	287	155	72	160°C
F4M8-x-xx	•	•	•	8	354	155	72	120°C
F4M8HT-x-xx	•	•	•	8	354	155	72	160°C
F4M10-x-xx	•	•	•	10	421	155	72	120°C
F4M10HT-x-xx	•	•	•	10	421	155	72	160°C
F4M12-x-xx	•	•	•	12	488	155	72	120°C
F4M12HT-x-xx	•	•	•	12	488	155	72	160°C

Ordering Example: Part No. + Flow sensor range (F4M4-1-20)

HT = High Temperature.
Complete unit with Pressure sensor installed on main inlet / return. Connect up to 4 manifolds to the touch screen in order to monitor uo to 48 separate cooling circuits.
Use the alarm limits (and output) on flow and temperature to control the process stability and part quality.

Material:
Flow modules: DZR Brass / nickel plated / Cover: stainless steel.

Flow	Standard Sensor	HT Sensor
Measuring range	0.5-10 l/min (0.13-2.64 gpm)	0.5-10 l/min (0.13-2.64 gpm)
	1-20 l/min (0,27-5,2 gpm)	1-20 l/min (0,27-5,2 gpm)
	2-40 l/min (0.53-10,4 gpm)	2-40 l/min (0,53-10,4 gpm)
Accuracy	(± 1 o) in water, ± 1% FS	(± 1 o) in water, ± 1% FS

FLOW

Temperature	Standard Sensor	HT Sensor
Measuring range	0-120°C (32-248°F)	0-160°C (32-320°F)
Accuracy	15-90°C (59-194°F) ± 0.5 K	15-90°C (59-194°F) ± 0.5 K
	0-120°C(32-248°F) ± 1 K	0-120°C (32-248°F) ± 1 K
		120-160°C (248-320°F) ± 2 K

TEMPERATURE

Pressure	Standard Sensor	HT Sensor
Measuring range	0-10 bar (0-145 psi)	
Accuracy	± 2.5% FS	

PRESSURE

Digital Flow Regulator

Replace analogue water flow regulators with the new digital industry 4.0 ready monitors

PRESSURE

FLOW

TEMPERATURE

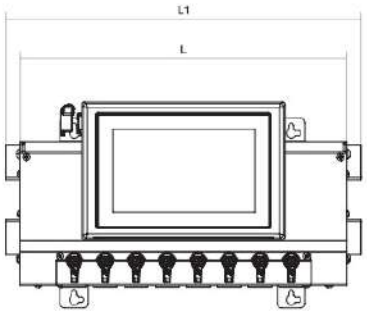

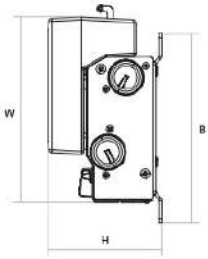

Part No.	Ports	Length mm	Length 1 mm	Width mm	Height mm	B mm	Flow	Temp.
FFRM4-0.5-10	4	220	250	200	123	205	0,5-10 l/m	120°C
FFRM4-1-20	4	220	250	200	123	205	1-20 l/m	120°C
FFRM4-2-40	4	220	250	200	123	205	2-40 l/m	120°C
FFRM6-0.5-10	6	287	317	200	123	205	0,5-10 l/m	120°C
FFRM6-1-20	6	287	317	200	123	205	1-20 l/m	120°C
FFRM6-2-40	6	287	317	200	123	205	2-40 l/m	120°C
FFRM8-0.5-10	8	354	384	200	123	205	0,5-10 l/m	120°C
FFRM8-1-20	8	354	384	200	123	205	1-20 l/m	120°C
FFRM8-2-40	8	354	384	200	123	205	2-40 l/m	120°C
FFRM10-0.5-10	10	421	451	200	123	205	0,5-10 l/m	120°C
FFRM10-1-20	10	421	451	200	123	205	1-20 l/m	120°C
FFRM10-2-40	10	421	451	200	123	205	2-40 l/m	120°C
FFRM12-0.5-10	12	488	518	200	123	205	0,5-10 l/m	120°C
FFRM12-1-20	12	488	518	200	123	205	1-20 l/m	120°C
FFRM12-2-40	12	488	518	200	123	205	2-40 l/m	120°C

Complete unit with Pressure sensor installed on main inlet. Retrofit your existing flow regulators with FloSense today.

Material:
Flow modules: DZR Brass / nickel plated / Cover: stainless steel.

Flow	Standard Sensor
Measuring range	0.5-10 l/min (0.13-2.64 gpm)
	1-20 l/min (0,27-5,2 gpm)
	2-40 l/min (0,53-10.4 gpm)
Accuracy	(± 1 c) in water, ± 1% FS

FLOW

Temperature	Standard Sensor
Measuring range	0-120°C (32-248°F)
Accuracy	15-90°C (59-194°F) ± 0.5 K
	0-120°C(32-248°F) ± 1 K

TEMPERATURE

Pressure	Standard Sensor
Measuring range	0-10 bar (0-145 psi)
Accuracy	± 2.5% FS

PRESSURE

Port Connector Plugs

Part No.	Connection	Size/series	
09NRF	R 1/2"	09 EURO Style	
13NRF	R 1/2"	13 EURO Style	
20NRF	R 1/2"	20 Int. Style	
30NRF	R 1/2"	30 Int. Style	
08NRF	R 1/2"	French Type	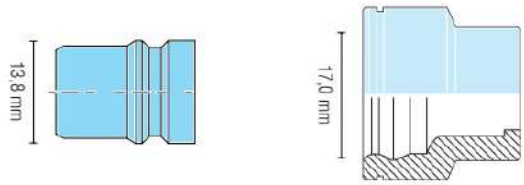
F9NRF	R 1/2"	French Matic	
06NRF	R 1/2"	06 Scandinavian Style	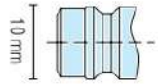
10MF	R 1/2"	10 mm Hosetail	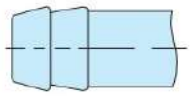
13MF	R 1/2"	13 mm Hosetail	
19MF	R 1"	19 mm Hosetail	
25MF	R 1"	25 mm Hosetail	
38MF	R 1"	38 mm Hosetail	

Extension Cable

Part No.	Connection	Length (mm)
FS-3P-EC1000	M8/M8/3P	1000
FS-3P-EC2000	M8/M8/3P	2000
FS-3P-EC5000	M8/M8/3P	5000
FS-3P-EC10000	M8/M8/3P	10000

Blanking Plug

Part No.	Connection	Seal
SSEC1	1" BSPP	FKM
SSEC1-1/4	1/4" BSPP	FKM
DR1-1/2	1/2" BSPP	FKM

Flosense Cart

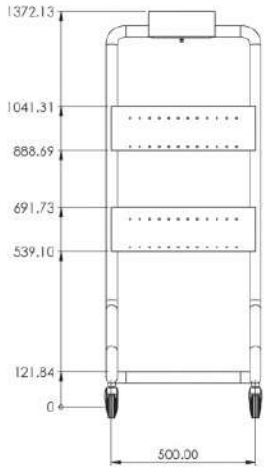

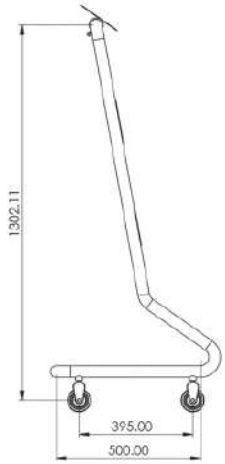

Part No.	# Manifolds	# Zones	Height (mm)	Width (mm)
FS-C-100	2	24	1400	500

Description
Flosense Cart ideal for flexible termal diagnostics. Equipped with wheels for easy mobility.
Material: Stainless Steel.

Note: The Cart is supplied without Flosense manifolds or Touch Screen.

FLOSENSE CART

DIGITAL FLOW METERS

Vortex Digital Single Zone Monitor

Part No.	Flow capacity	Connection	Voltage
SZ-120	1-20 l/m	G 1/2	18..30DC
SZ-240	2-40 l/m	G 1/2	18..30DC
SZ-5100	5-100 l/m	G 3/4	18..30DC

- Integrated temperature measurement
- Flow measurement
- Limit setting of flow and temperature
- Alarm output signal
- Rotatable display
- Temperature range from -10°C to 90°C

Material: Stainless steel body and connection
Pressure: 12 bar
Temperature: from -10 to +90 C°
Protection class: IP 65/IP67.

Wall Plug Power Supply

Part No.	Voltage input	Voltage output
SZ-P230	100-240V.	24 V.

Kit including: wall plug cable, power supply and M12 Connector cable.

Power and Data Cable M12

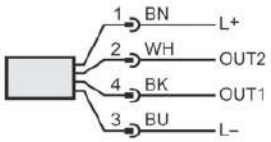

Part No.	Length	Connection	Voltage range
SZC-3000	3 m.	M12	24DC

Waterflow Regulator

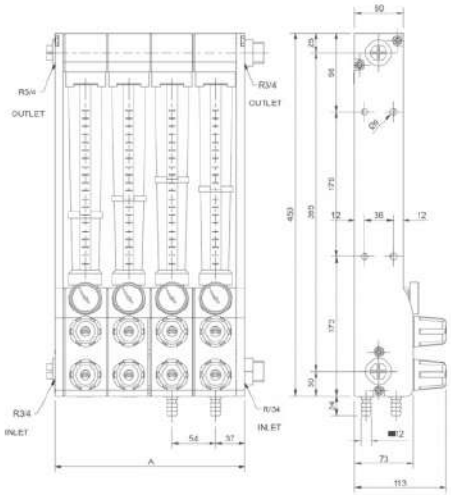

Part No.	Main Connections inlet / oulet	Max.Temp.	Zones	Zone Connection	A (mm)
MPR02R	R 3/4"	90°C*	2	R 3/8"	126
MPR04R	R 3/4"	90°C*	4	R 3/8"	231
MPR06R	R 3/4"	90°C*	6	R 3/8"	339
MPR08R	R 3/4"	90°C*	8	R 3/8"	444
MPR10R	R 3/4"	90°C*	10	R 3/8"	552
MPR12R	R 3/4"	90°C*	12	R 3/8"	659

* Temperature vs Pressure: 8 bar 40°C, 7 bar 60°C, 5 bar 80°C, 4 bar 90°C

Water flow regulators are ideal for regulating the flow rate of water passing through them as well as the water outlet temperature.
The high quality construction and design make the unit one of the most competitive.

Note! Supplied without fittings

Technical characteristics
- The tube is made of Polyamide (standard).
- Zone Flow Capacity 0-18 L/M
- Interior and exterior bodies are made of PA 6 with 30% fibre glass.
- Brass regulating taps.
- Thermometers (standard).
- Stainless steel interior tie-rods.
- Vitrilic rubber o-rings (hardness: 70 SHA).

Spare Part List

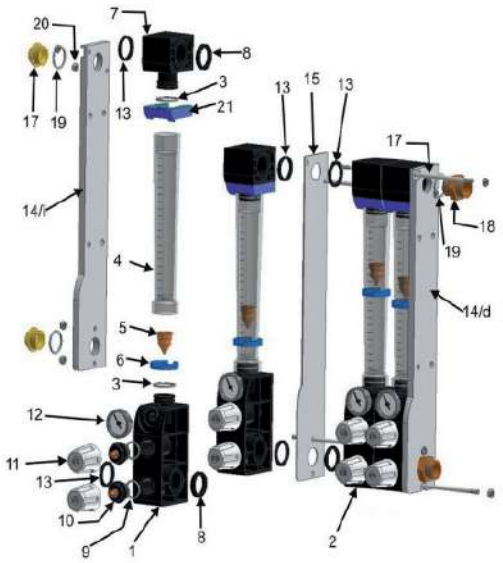

No	Part No.	Description
1	MPR-S-1	Inferior body 3/8 BSP connections
2	MPR-S-2	Inferior body with pipes
3	MPR-S-3	Tube O-ring
4	MPR-S-4	Polyamide tube
5	MPR-S-5	Brass
6	MPR-S-6	Level clip
7	MPR-S-7	Superior body
8	MPR-S-8	Intermediate o-ring
9	MPR-S-9	Tap O-ring 21x3
9.1	MPR-S-9.1	Tap O-ring Ø6x2
10	MPR-S-10	Tap
11	MPR-S-11	Knob
12	MPR-S-12	Thermometer
13	MPR-S-13	End O-ring / left 28x35x3,5
14 d	MPR-S-14d	Right aluminium end plate
14 i	MPR-S-14i	Left aluminium end plate
15	MPR-S-15	Intermediate plate
17	MPR-S-17	Plastic cap
18	MPR-S-18	3/4" brass connector (optional)
20	MPR-S-20	Nut
21	MPR-S-21	Tube security clip
22	MPR-S-22	End O-ring / right 28x35x5,5

ANALOGUE FLOW METERS

Flow Indicator

Part No.	Flow Rate H^2O LPM Min	Max	Length	Ø mm	Thread	AF	Max Pressure (bar)
CFV1BN	1	10	59	25	1/4"	19	10
CFV2BN	2	20	71	30	3/8"	24	8
CFV3BN	3	30	71	30	1/2"	24	8
CFV4BN	4	40	106	47	3/4"	40	5
CFV5BN	6	60	106	47	1"	40	5

Use:
The CFV impeller flow indicators are generally used to monitor the correct flowing and circulation of a fluid into a pipeline. They are ideal for cooling and heating circuits, water treatment, and plastics processing equipment.

Note:
Flow rates refer to a vertical mounting with fluid inlet upwards.

Specifications:
Body: Nickel-plated brass
Impeller: Red Hostaform
Glass: Pirex
Seals: NBR
Max temperature: 90°C

De-Scaling Pump - With Flow Reverser

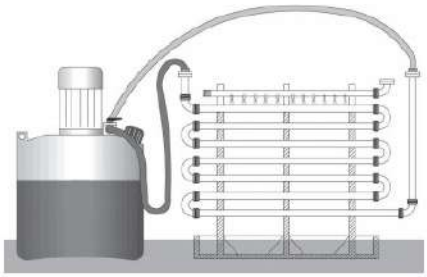

Part No.	Tank Capacity	Flow Rate	Reverse system	Fittings	HP
DP15M	15 l.	48 l/min.	Manual	1/2"	0,2
DP15A	15 l.	40 l/min	Automatic	1/2"	0,17
DP30M	24 l.	90 l/min.	Manual	1/2"	0,45
DP30A	24 l.	91 l/min.	Automatic	1/2"	0,45

Used for clearing blocked or badly corroded heating and cooling circuits on Injection Moulding Machines and Moulds. Even when not blocked a relatively thin layer of scale or corrosion can act as an insulator and have a huge impact on the efficiency of your circuit. Simply fill up the pump with the descaling fluid, connect the pump to the inlet and outlet of the circuit and turn on the pump. Regular reversal of flow direction, either manual or automatic, speeds up operation and assists in dislodging any solid matter present in pipework and cooling circuits.

By using the pump together with the recommended range of descaling fluids to remove both rust and limescale deposits. The descaling fluid contains a colour change indicator to monitor performance; the translucent tank means that the user can see when the red colour runs clear and is no longer effective. Use the neutralising fluid to create a pH neutral fluid which can be easily disposed of.

Easy, safe and professional maintenance of mould cooling circuits and temperature controllers

- Compact and portable
- Safe and easy to use
- Flow reversing system
- Full range of cleaning products available
- 4 models available to suit your application

Mould Cooling circuits which are corroded or partly blocked by scale cause:

- Reduced flow
- Reduced efficiency
- Longer cycle times
- Temperature problems
- Increased maintenance
- Faulty parts

Automatic Reverser

Manual Reverser

Cooling pipe with Scale build-up

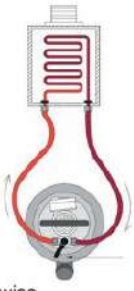

Fig. 1 Clockwise circulation

Fig. 2 Counterclockwise circulation

De-Scaling Solution

Part No.		kg	Weight	Copper	Steel	Stainless Steel	Aluminium	Brass	Tin	Light alloys	Galvanised Iron
Descaling Chemicals											
RL10	Remover Liquid	10	10 kg	•	•			(•)			
RL10P	Remover Plus Liquid	10	10 kg	•	•			(•)			
RP10	Remover Plus Powder	10	10 kg			•	•	•	•	•	
Neutralizing Chemicals											
NP10	Neutralizer	10	10 kg	•	•	•	•	•	•	•	•

Remover Liquid
Concentrated descaling liquid with powerful reaction for systems and heat exchangers.

Remover Plus Liquid
Concentrated descaling liquid (non-fuming), with degreasing action, for systems and heat exchangers.

Remover Plus Powder
Concentrated descaling powder (non-corrosive, non-fuming) for systems and heat exchangers.

Neutralizer
Neutralizing powder to remove residual acidity after descaling systems and heat exchangers. Also suitable for neutralizing descaling chemicals after use, thus making it possible to drain them.

Pressure Test Unit

Part No.	Pressure (BAR)	Connection	Weight
MP-60	0-60	1/2 Female BSPP	5,5 kg

Pressure test unit - for easy leakage test of Mould circuits.
Supplied with connecting hose and water tank.

Corrosion, Scale and Biological Inhibitors

Performance Properties

Mouldpro Inhibitors have been specially formulated with Ethylene Glycol for use as an Industrial Grade additive for use in Mould Cooling and Heating systems.

ThermaFlo
DTX-25
Ethylene based

Optimum Flow:	Improved heat transfer characteristics, including; lower Dynamic Viscosity and higher Thermal Conductivity.	☒
Protection:	Contains synergistic corrosion inhibitors to protect metals commonly found in mould cooling systems.	☒
Biodegradable:	Mixtures are readily biodegradable (90% over ten days) and will not remain in the environment or bio-accumulate.	☒
Scale Protection:	Contains scale and biological inhibitors to help prevent fouling - thus promoting long operational life and high thermal efficiency.	☒
Non Toxic:	Has an toxicity rating: "Relatively Harmless" as confirmed by the Hodge & Sterner Scale.	☒

Part No.	Type	Temperature range	Container size
DTX-25	Ethylene	-50 to +140°C	25 Ltr

Refractometer

Part No.	Scale	Ethylen Glycol	Propylene Glycol	Accuracy
RFM-200ATC	Brix	Yes	Yes	±0,1%

Includes
Ethylene Glycol: -60°C - 0°C / 0-66.6%.
Propylene Glycol: -50°C - 0°C / 0-62.4%.
Simple, accurate and repeatable measurement of concentration of glycol antifreeze with Automatic Temperature Compensation (ATC).
Includes calibration screwdriver, and case.

PH Test Paper - Alkaline Acid Indicator

Part No.	PH scale	Length	
DP-PH-PAPER	1-14	5 m.	1

Alkaline Acid Indicator Meter- Ph Test Paper.
FEATURES: With Distinct Color PH Scale for Result Comparisons. The Test Strip Color Changes Must Be Matched with the PH Scale Color Chart Within About 15 Seconds. Quick and Easy to Use. Provides Reliable and Accurate PH Readings. Easy to Carry. Appropriate for Testing Alkaline or Acid Level of Any Liquid.
Scale Reads From 0 to 14: 0 - 3 Indicates a Very Acidic Substance 4 - 6 Indicates an Acidic Substance 7 Indicates Neutral 8 - 11 Indicates Alkalinity 12 - 14 Indicates a Very High Level of Alkalinity

Inline filters specially designed for cooling channels or core cooling channels. The filter cartridge removes dirt particles, rust, or scale deposits.
The temperature filter is made of stainless steel and brass.
Easy maintenance of the filter:

1. Separate the 2 housing parts
2. Clean filter in an ultrasonic bath
3. Re-assemble the 2 housing parts

Inline Filter

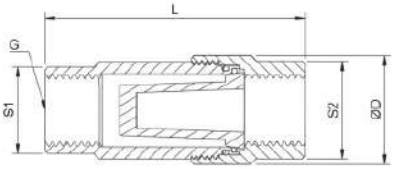

Part No.	Ø D	G	S1	S2	L	Filter area mm²
ILF-R1/4	20	1/4" BSP	16	18	48	660

Spare filter: SF-R1/4

Inline Filter

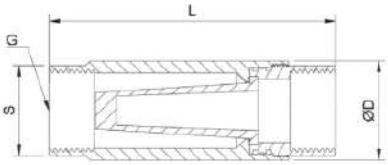

Part No.	Ø D	G	S	L	Filter area mm²
ILF-R3/4	32	3/4" BSP	29	93,5	2500

Spare filter: SF-R3/4

Inline Filter - with Maintenance Indicator

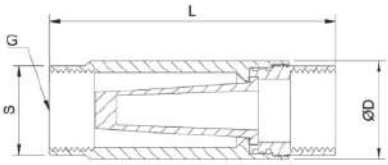

Part No.	Ø D	G	S	L	Filter area mm²
ILF-R3/4-M	32	3/4" BSP	29	93,5	2500

Spare filter:	SF-R3/4
Pressure loss:	10-15%
Operating temperature:	Max 140 degrees
Max. Pressure:	8 bar
Pore size (filter):	100 μm
Material:	Stainless steel
Seals:	FKM

Stainless Steel In-Line Filter - MPF-80-200

Base Unit

Part No.
MPF-80-200

Maintenance indicator (optional)

Part No.
MPF-M

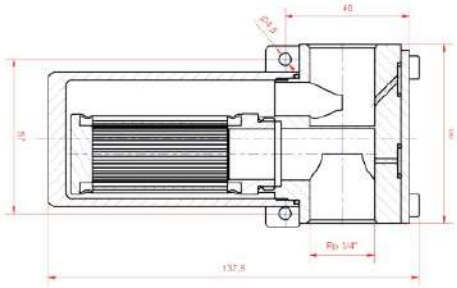

Dirt particles in coolants often result in blockages in small cooling channels and can render mould inserts useless. This maintenance friendly Mouldpro stainless steel in-line filter MPF-80-200 offers superior low cost protection against foreign body particles, in particular for conformal cooling channel of injection moulding tools.

The filter can be flanged to the mould or operated in conjunction with temperature control units.

Sure protection of your temperature cooling channels

High filter performance is based on a starshaped folded stainless steel sieve that prevents the ingress of all particles of >200 μm into the cooling channel.

Versatile use

The filter is suitable for use with water- or oil-based coolants with a flow volume of up to 80 l/min and offers versatile application possibilities within a temperature range of -10 to 260°C.

Simple maintenance

A maintenance friendly concept allow easy removal of the filter insert, which can be cleaned with compressed air, in an ultrasound bath or by means of a high pressure cleaner. The filter housing remains in the system circuit.

The MPF-80-200 can be supplied with an optional maintenance indicator.

All advantages at a glance:

- Low cost with high filter performance
- Simple maintenance and cleaning
- Suitable for high flow volumes
- Large temperature range

Filter insert

Part No.
MPF-F

Maintenance indicator

Part No.
MPF-M

O-Ring

Part No.
MPF-O

Technical data	
Material	Stainless steel 1.4305
Connection thread	G 3/4"
Coolant	Water / oil
Pressure range	PN 16
Operating temperature	-10°C / 260°C
Seal	PTFE
Dimensions	76 x 56 x 131 mm (L x W x H)
Weight	approx. 1.3 kg

Design according to:
Pressure Equipment Directive 97/23/EU, pressure equipment type acc. to Art.
1: container, fluid acc. to Art. 9: group
2: others acc. to Art. 3, para.
3: good engineering practice, suitable for max. 1,000 full cycle motions.

Filter insert	
Material	Stainless steel 1.4305, adhesive-free, rolled
Mesh width	200 μm
Filter surface	approx. 150 cm²
Connection	Thread connector
Dimensions	Ø 32 X 76 mm

Maintenance indicator (optional)	
Principle	Differential pressure measurement
Seal	PTFE O-ring
Dimensions	45 x 30 x 66 mm (L x W x H)

O-Ring	
Material	PTFE
Dimensions	Ø 45 X 1.5 mm

Ball Valve with Integrated Filter

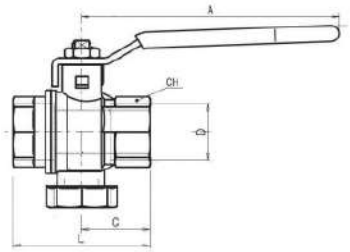

Part No.	D	L	G	A	CH
BVF1/2	1/2"	50,7	26,7	100	25
BVF3/4	3/4"	61,3	32,3	100	31
BVF1	1"	70,1	35,6	100	38
BVF1-1/4	1.1/4"	85	45	158	48
BVF1-1/2	1.1/2"	97,5	52	158	54
BVF2	2"	117	63	158	66

Ball Valve with Integrated Filter and Magnet

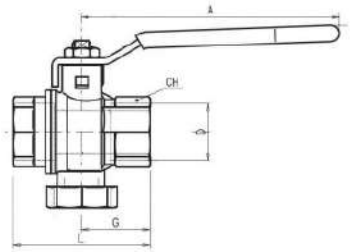

Part No.	D	L	G	A	CH
BVFM3/4	3/4"	61,3	32,3	100	31
BVFM1	1"	70,1	35,6	100	38
BVFM1-1/4	1.1/4"	85	45	158	48
BVFM1-1/2	1.1/2"	97,5	52	158	54
BVFM2	2"	117	63	158	66

Quality:
- Substitutes 3 different components (2 ball valves and one filter)
- Reduces leakage risks due to lower sealing points
- Cost saving due to reduced number of components
- Time saving at installation and maintenance
- Built-in vertical filter with cartridge structure in AISI304 + Nylon (filtration degree: 500 microns / 35 mesh). Size ½" has a central rib to ease filter extraction.
- Final test conforming with UNI EN 12266-1 points A3 / A4 (for 1.½" and 2" sizes: acc. to directive 2014/68/UE)
- No metal-to-metal moving parts
- Handle clearly shows ball position
- Chrome plated brass ball for longer life
- Handle stop on body to avoid stress at stem

Body
- Hot forged sand blasted, external nickel plated brass body and cap sealed with L octite® or equivalent thread sealant
- Finest brass according to EN 12165 and EN 12164 (formerly DIN 17660 and UNI 5705-65) specifications
- Bottom plug for an easy filter maintenance

Stem
- Blowout-proof unplated brass stem
- Two O-rings at the stem (FKM + NBR) for maximum safety

Sealing
- Pure PTFE seats

Threads
- ISO 228 parallel female by female threads

Flow
- Nominal port

Handle
- Zinc plated steel handle with plastic dip coating
- WARNING: do not exceed reasonable temperature and/or electrical load

Magnet
- Neodymium (12.000 gauss) NdFeB

Working pressure & temperature
- 30 Bar (450 PSI) non-shock cold working pressure for sizes ½" to 1", 20 Bar (290 PSI) for sizes 1.¼" to 2"
- -20°C / +150°C (-4°F / +300°F)
- WARNING: freezing of the fluid in the installation may severely damage the valve

PED directive
- According to 2014/68/UE, 1.¼" and superior sizes cannot be used with dangerous fluids

Cost Saving Solution

BVF Filter Valve substitues traditional Y Strainers combined with 2 ball valves.
- Full port
- Low pressure drop
- Assembly space and time very limited
- Easy to be cleaned and maintained
- All impurities gather inside the filter
- Maximum pressure 30 bar (PN30)
- Increased filter quality with cartridge structure for all sizes. Filter for size 1/2" will have a central rib to ease filter extraction

CONSUMABLES

03.

110 MOULD CLEANING

114 MOULD RELEASE

116 MOULD PROTECT

118 MOULD LUBRICANT

120 NANO MOLD COATING

122 PURGING COMPOUND

123 ABSORBENTS

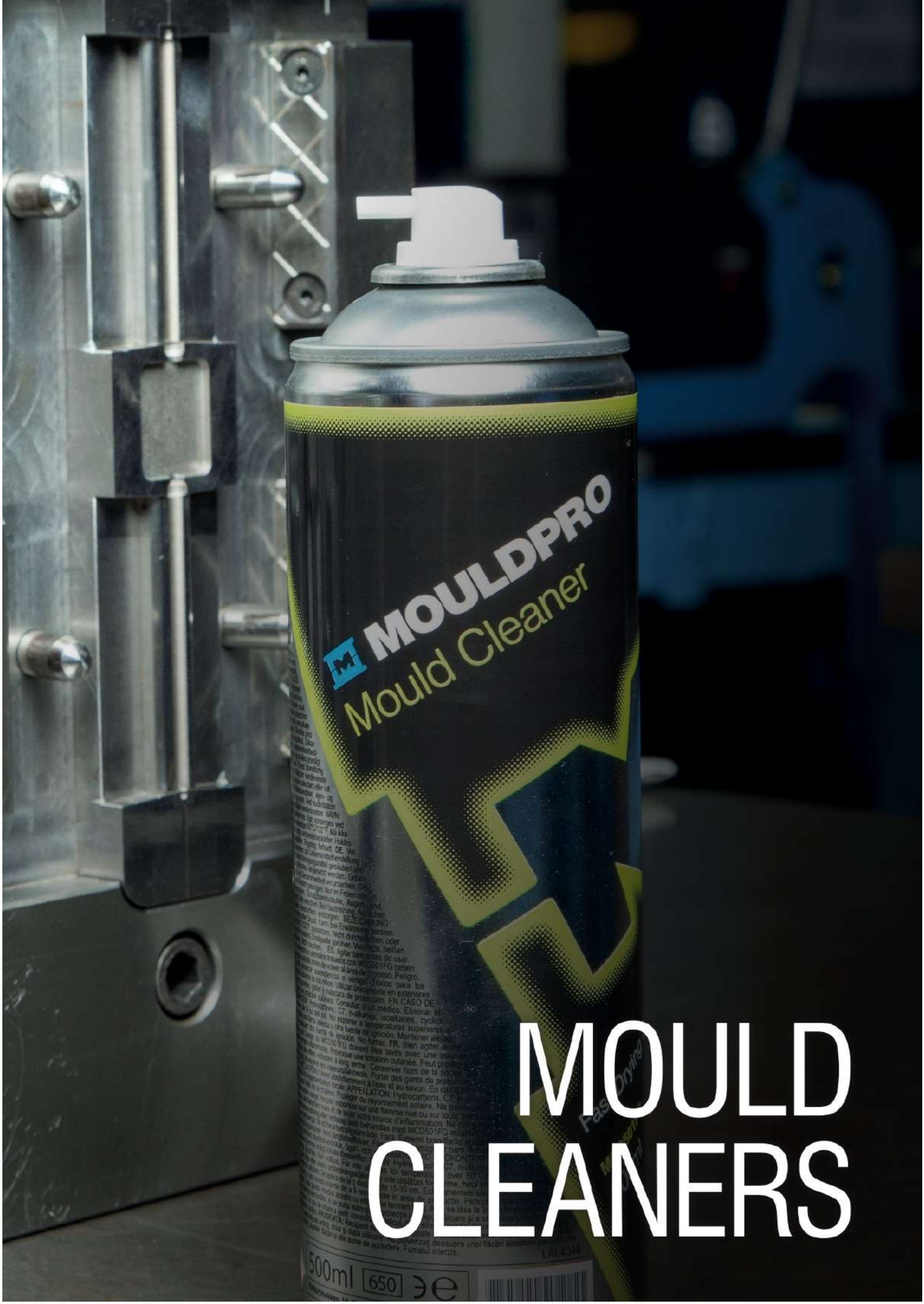

MOULD CLEANERS

MOULD CLEANING

Mould Cleaner/Degreaser

CLEAN

Part No.	Description	Size	
MCD501	Mould Clean - Fast drying	500 ml / 18 oz	12

Cleaning agents remove plastic residue from moulds and dies including residues caused by cracking, for example. They provide for time-saving production processes, for dimensional accuracy of plastic parts and mouldings, for flawless surface structure and also preserve machine components.

Features
- Degreaser for removing oil, grease and wax residues from moulds.
- Supplied in aerosol form, all aerosols are free of fluorocarbons.

Mould Cleaner/Degreaser

CLEAN

NSF

Part No.	Description	Size	
MCD501FG	Mould Clean - Fast drying	500 ml / 18 oz	12

Cleaning agents remove plastic residue from moulds and dies including residues caused by cracking, for example. They provide for time-saving production processes, for dimensional accuracy of plastic parts and mouldings, for flawless surface structure and also preserve machine components.

Features
- Degreaser for removing oil, grease and wax residues from moulds.
- Supplied in aerosol form, all aerosols are free of fluorocarbons.

Mould Citrus Cleaner/Degreaser

CLEAN

Part No.	Description	Size	
MCD551	Citrus Degreaser - Slow drying	500 ml / 18 oz	12

Citrus Based Solvent Degreaser. High performance citrus based cleaning solvent. An ideal alternative to traditional chlorinated or highly volatile solvent cleaners. Slow drying which allows maximum cleaning results.

Features
- Natural based, high performance cleaner/ degreaser.
- Fully biodegradable.
- Deep penetrating action.
- Classified as non-flammable.
- Safe on metals and most plastics.
- Effective on a wide range of soiling such as oil, grease, tar, bitumen, silicones, rubber-based adhesives, oil-based paints, inks and dye.
- Pleasant orange Citrus odour.

Mould Cleaner/Polymer Remover

CLEAN

Part No.	Description	Size	
MPR501	Mould Clean Polymer Remover	500 ml / 18 oz	12

Cleaning agents remove plastic residue from moulds and dies including residues caused by cracking, for example. They provide for time saving production processes, for dimensional accuracy of plastic parts and mouldings, for flawless surface structure and preserve machine components.

Features
- Designed to remove polymer deposits, plastic, antisoluble resins, grease and oils.
- Water soluble.
- Highly active organic cleaner.
- Supplied in aerosol form, all aerosols are free of fluorocarbons.

Heavy Duty Polymer Remover

CLEAN

Part No.	Description	Size	
MPR502FG	Heavy Duty Mould Clean Polymer Remover	500 ml / 18 oz	12

Heavy Duty Cleaning agents remove plastic residue from moulds and dies including residues caused by cracking, for example. They provide for time saving production processes, for dimensional accuracy of plastic parts and mouldings, for flawless surface structure and preserve machine components.

Features

- Designed to remove polymer deposits, plastic, antisoluble resins, grease and oils.
- Water soluble.
- Highly active organic cleaner.
- Supplied in aerosol form, all aerosols are free of fluorocarbons.

Anti-Static Surface Foam Cleaner

CLEAN

Part No.	Description	Size	
MFC501	Foam Cleaner	500 ml / 18 oz	12

Mouldpro Foam Cleaner is a unique anti-static foaming cleaner based on a blend of surfactants, solvents, inhibitors and water.

Features

- Unrivalled in performance.
- Quickly and easily removes all types of dirt, grease, stains, soiling and other contamination from hard surfaces.

Anti-Static Surface Foam Cleaner

CLEAN

Part No.	Description	Size	
MFC502FG	Foam Cleaner	500 ml / 18 oz	12

Mouldpro Foam Cleaner is a unique anti-static foaming cleaner based on a blend of surfactants, solvents, inhibitors and water.

Features

- Unrivalled in performance.
- Quickly and easily removes all types of dirt, grease, stains, soiling and other contamination from hard surfaces.

Mould Polish

POLISH

Part No.	Description	Size	
MCP060	Mould Polish Paste	60 ml.	1

This superior, quality Mould polish is perfect for cleaning and polishing steel moulds. It safely and easily removes oxidation, corrosion, stains, and rust. It produces a brilliant reflective luster and leaves an invisible protective coating to ensure a long-lasting shine.

CLEANING WIPES

Mould Cleaner Wipes

Part No.	
WMC80	1

Mould Cleaner Wipes are specifically developed for cleaning and degreasing of mould surfaces.

Features
- Ultra-low linting non-abrasive wipe.
- Leaves no residues.
- Supplied in tub of 80 wipes.

Rust Remover Wipes

Part No.	
WRR80	1

A tough textured wipe impregnated with citric acid cleaners to remove rust and other oxides from ferrous metal surfaces. Using a non-hazardous chemical and a tough, textured wipe material the product provides an effective alternative to traditional hazardous nitrate based chemicals used for rust removal.

Features
- Supplied in tub of 80 wipes.

Multi Wipes

Part No.	
WMW100	1

Ideal for the quick and easy clean-up of hands, tools and machine surfaces. The heavy duty Multi Wipe material is impregnated with a hi-tech cleaning solution that contains antibacterial properties for fast removal of dirt, oil, grease, adhesives, varnishes, scuff marks, wet paint, mastic and expanding foam. Multi Wipes combine high performance with minimal hazard to the user and the environment.

Features
- Contains no white spirits or other harmful solvents.
- Wipes contain antibacterial properties certified to BSEN1276 Standard.
- Supplied in tub of 100 wipes.

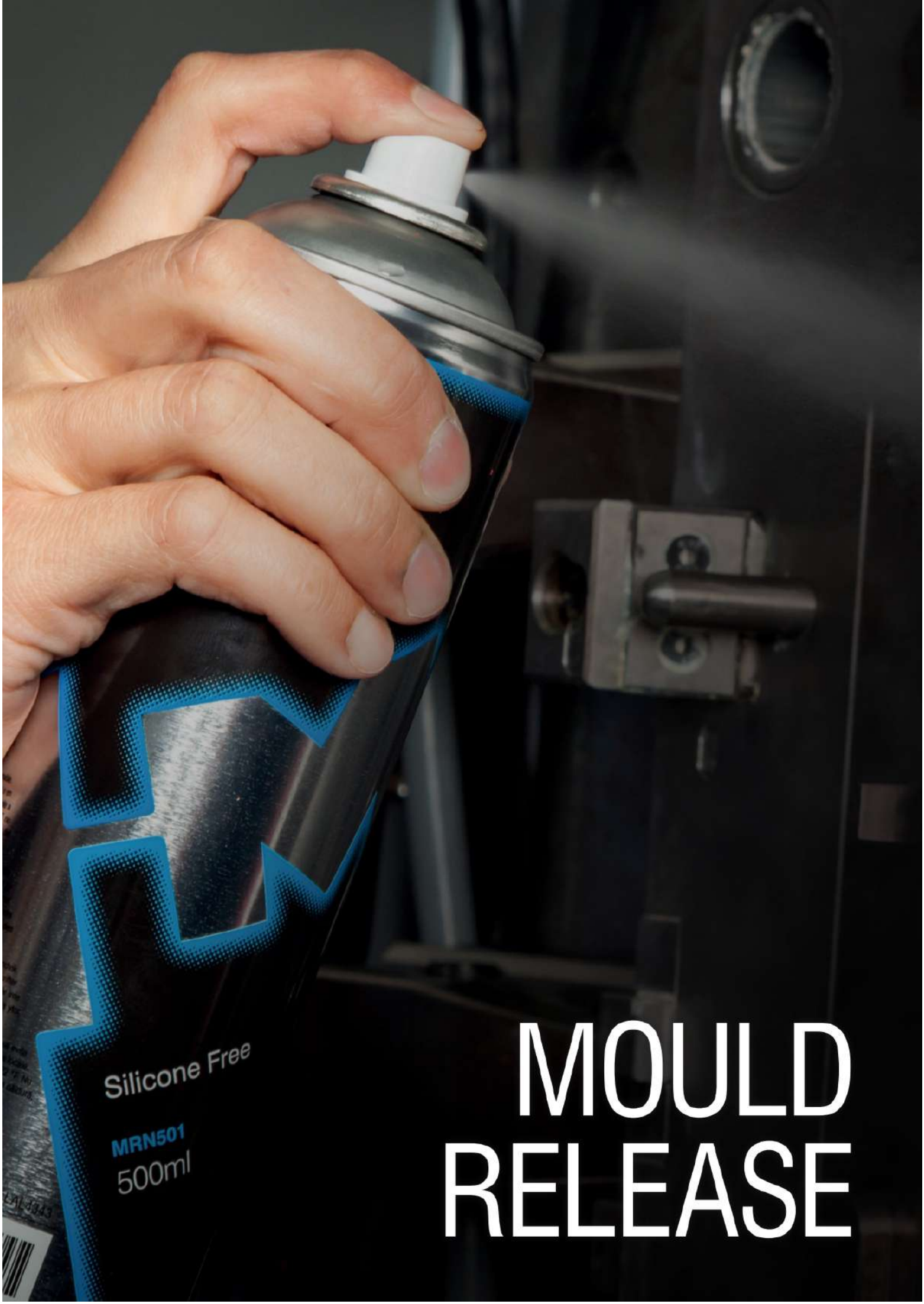

MOULD RELEASE

MOULD RELEASE

Mould Release, Silicone Free

RELEASE

Part No.	Description	Size	
MRN501	Mould Release Silicone free	500 ml / 18 oz	12

Universal release agent on a base of synthetic oils.

Features
- A high quality proven release agent that ensures trouble free moulding.
- Saves time, shortens cycle times, reduces scrap and is gentle on dies and moulds.
- Suitable for thermoplastic or thermoset moulding.

Mould Release, Silicone

RELEASE

Part No.	Description	Size	
MRS501	Mould Release Silicone	500 ml / 18 oz	12

Universal release agent on a base of silicone.

Features
- A high quality proven release agent that ensures trouble free moulding.
- Saves time, shortens cycles times, reduces scrap and is gentle on dies and moulds.
- Suitable for thermoplastic or thermoset moulding.

Mould Release, Silicone Free

RELEASE NSF

Part No.	Description	Size	
MRN501FG	Mould Release Silicone free	500 ml / 18 oz	12

Universal release agent on a base of silicone.

Features
- A high quality proven release agent that ensures trouble free moulding.
- Saves time, shortens cycles times, reduces scrap and is gentle on dies and moulds.
- Suitable for thermoplastic or thermoset moulding.

Spray Can Holder

Part No.	Number of cans	Length	
MCH02	2	170 mm	1
MCH03	3	250 mm	1
MCH04	4	330 mm	1

Material: Stainless Steel

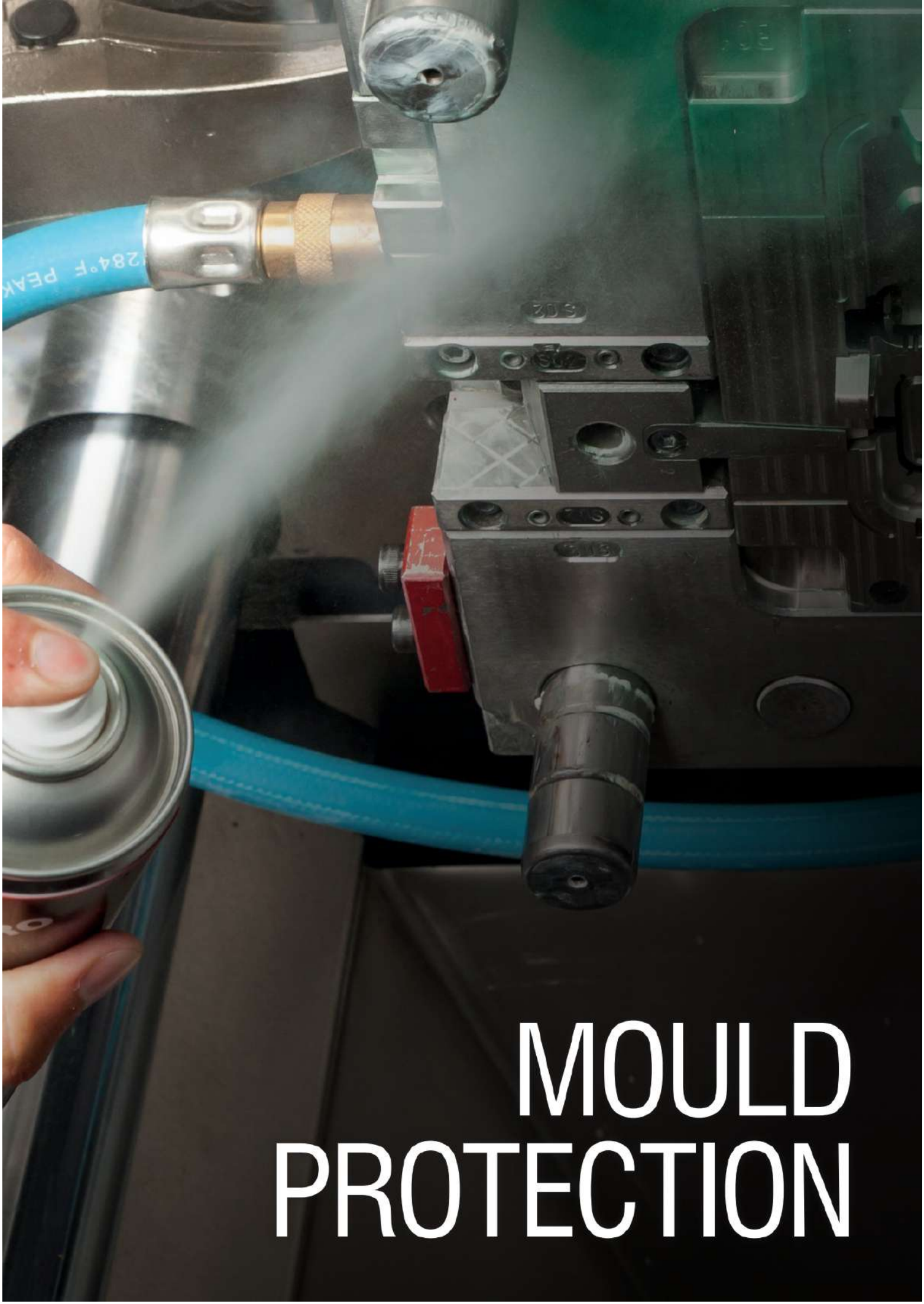

MOULD PROTECTION

MOULD PROTECTION

Mould Protect, Green

PROTECT

Part No.	Description	Size	
MPG501	Mould Protect Green	500 ml / 18 oz	12

Anti-corrosion agents provide dismantled dies, moulds and parts with long-term protection against corrosion. This ensures that your mould is always ready for use, maintaining value and efficiency.

Features
- Wax-type anti-corossion agents - it is not necessary to remove the protective film prior to use.
- This agent does not creep.
- Supplied in aerosol form, free from fluorocarbons.

Mould Protect Wax, Clear

PROTECT

Part No.	Description	Size	
MPW501	Mould Protect Clear	500 ml / 18 oz	12

Anti-corrosion agents provide dismantled dies, moulds and parts with long-term protection against corrosion. This ensures that your mould is always ready for use, maintaining value and efficiency.

Features
- Wax-type anti-corrossion agents - it is not necessary to remove the protective film prior to use.
- This agent does not creep.
- Supplied in aerosol form, free from fluorocarbons.

Mould Protect, Blue

PROTECT

Part No.	Description	Size	
MPB501FG	Mould Protect Blue	500 ml / 18 oz	12

Anti-corrosion agents provide dismantled dies, moulds and parts with long-term protection against corrosion. This ensures that your mould is always ready for use, maintaining value and efficiency.

Features
- Wax-type anti-corossion agents - it is not necessary to remove the protective film prior to use.
- This agent does not creep.
- Supplied in aerosol form, free from fluorocarbons.

Mould Protect Wax, Clear

PROTECT

Part No.	Description	Size	
MPW501FG	Mould Protect Clear	500 ml / 18 oz	12

Anti-corrosion agents provide dismantled dies, moulds and parts with long-term protection against corrosion. This ensures that your mould is always ready for use, maintaining value and efficiency.

Features
- Wax-type anti-corossion agents - it is not necessary to remove the protective film prior to use.
- This agent does not creep.
- Supplied in aerosol form, free from fluorocarbons.

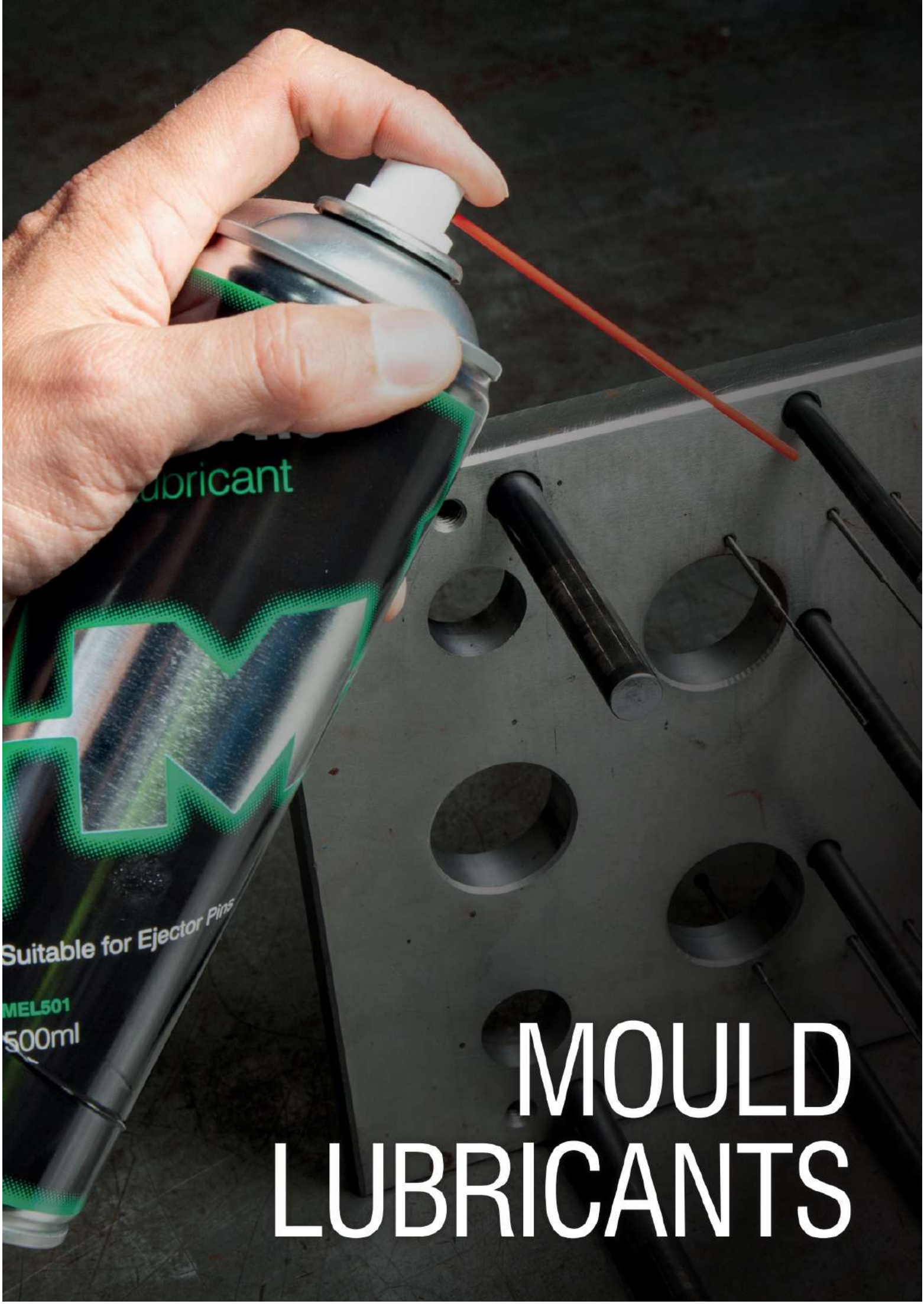

MOULD LUBRICANTS

MOULD LUBRICANTS

Ejector Pin Lubricant

LUBRICATE

Part No.	Description	Size	
MEL501	Ejector Pin Lubricant	500 ml / 18 oz	12

Non-soiling lubricants that keep moving parts running smoothly and prevent damage due to breakage and seizing. For Slides and Ejector Pins.

Features
- Thin-film lubrication, long-term action, good protection from corrosion.
- Application temperature range : -30°C - +150°C.
- Supplied in aerosol or paste form, all aerosols are free of fluorocarbons.

Maintenance Lubricant

LUBRICATE

Part No.	Description	Size	
MWD501	Maintenance Lubricant	500 ml / 18 oz	12

A multi-purpose product for lubricating, cleaning, dewatering, penetrating and corrosion protection. Can be used in endless applications on all metallic surfaces including moulds, chains, gears, tools, etc.

Features
- Long lasting lubrication moisture displacement.
- Forms a temporary anti-corrosion coating.
- Penetrates rust and corrosion.
- Contains PTFE for improved lubrication and load resistance.

Ejector Pin Lubricant

LUBRICATE

NSF

Part No.	Description	Size	
MLF501FG	Ejector Pin Lubricant	500 ml / 18 oz	12

Non-soiling lubricants that keep moving parts running smoothly and prevent damage due to breakage and seizing.

Features
- For Slides and Ejector Pins.
- Thin-film lubrication, Food Grade, long term action, good protection from corrosion.
- Operating Temperature - up to 260°C.

Ejector Pin Lubricant - General Purpose - Food Grade

LUBRICATE

NSF

Part No.	Description	Size	
MEP500FG	White Mould Lubricant	0,5 kg	1

Fully synthetic food grade grease manufactured using the most advanced lubrication technology, and is designed to cover a wide range of Food Industry Applications: Including low/high temperatures, wet and saturated conditions, heavily loaded applications, and where there is the presence of dust & other contaminants.

MEP500FG is formulated with Extreme Pressure (EP) additives and PTFE to provide a high degree of anti-wear and friction reduction performance. Suitable for injection moulds in particular for use on ejector pins, guide pins, slides and moving cores, etc. This grease is suitable for all plain and anti-friction bearings as well as sliding surfaces and general Food & Non-Food Industry applications.

- Temp range -50c to + 180c
- High Load Grease 400kg weld load
- Water & Chemical Resistant
- Extends Lubrication Frequencies
- Standardisation "One Grease for Most Applications

Ejector Pin Lubricant - Food Grade

LUBRICATE

Part No.	Description	Size	
MLF500FG	Ejector Pin Grease	0,5 kg	1

Non-soiling lubricants that keep moving parts running smoothly and prevent damage due to breakage and seizing.
For Slides and Ejector Pins. Thin-film lubrication, Food Grade, long term action, good protection from corrosion.
Operating Temperature - up to 260 C.

Ejector Pin Lubricant - Food Grade

LUBRICATE

Part No.	Description	Size	
MLF080	Ejector pin Grease	80 ml.	1

Non-soiling lubricants that keep moving parts running smoothly and prevent damage due to breakage and seizing.

Features
- For Slides and Ejector Pins.
- Thin-film lubrication, Food Grade, long term action, good protection from corrosion.
- Operating Temperature - up to 260°C.

Copper Anti-Seize Assembly Compound

LUBRICATE

Part No.	Description	Size	
MCS500	Copper Assembly Compound	0,5 kg	1

Mouldpro Copper Anti-Seize ensures rapid and easy assembly of threaded parts. It allows correct torque to be applied by eliminating thread interference.
Mouldpro Copper Anti-Seize paste prevents seizing and galling and gives quick and easy breakout of threads, gaskets and packings even after long exposure to high temperature, corrosive conditions or extreme surface pressures. It also reduces wear in areas of high friction. Temperature up to 1.100°C.

Copper Anti-Seize Assembly Compound

LUBRICATE

Part No.	Description	Size	
MCS080	Copper Assembly Compound	80 ml.	1

Mouldpro Copper Anti-Seize ensures rapid and easy assembly of threaded parts. It allows correct torque to be applied by eliminating thread interference.

Features
- Prevents seizing and galling.
- Gives quick and easy breakout of threads, gaskets and packings even after long exposure to high temperature, corrosive conditions or extreme surface pressures.
- Reduces wear in areas of high friction.

NANO MOULD COATING

NanoMoldcoating®

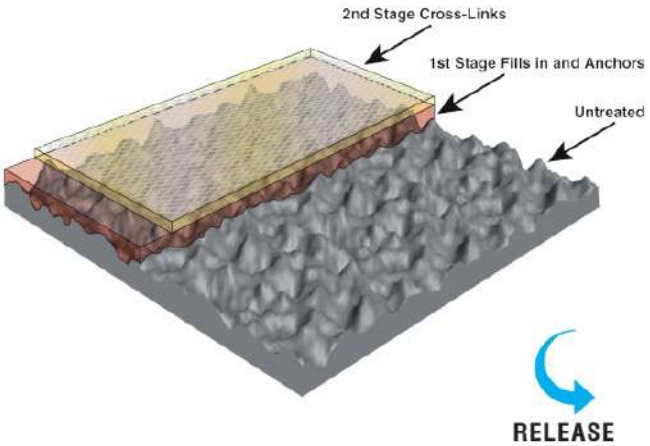

Type	HC-Heat Cure	"HCF-Heat Cure FDA Compliant"	QC-Quick Cure	"QCru-Quick Cure Rubber"	"QCsi-Quick Cure Silicone"
Part No.	HC-5ml	HCF-5ml.	QC	QCRU	QCSI
Excellent Release	•	•	•	•	•
Thermoplastics all grades	•	•	•		
Rubber				•	
Silicone					•
Cure time 10-15 min.			•	•	•
Cure time 3-4 hours.	•	•			
Cured with hot air	•	•			
Cured by heating mould			•	•	•
Application on cold surface	•	•			
Application on heated surface			•	•	•
Bonds on pre-treated surfaces			•	•	•
Multiple coats are possible	•	•	•	•	•
Solvent Carrier	•	•			
Water Carrier			•	•	•
Polymer film	•	•			
Flouropolymer film			•	•	•
Up to 500K Cycles	•	•	•	•	•
May require frequent reapplication			•	•	•
Temperatures up to 250°C	•	•	•	•	•
Temperatures up to 540°C	•	•			
Bottle net volume	5ml.	5ml.	60ml.	60ml.	60ml.

Benefits for your Production

- Up to 500,000 cycles per coating
- Reduces cycle times, increases productivity & eliminates sticking
- In-house/Self applied application
- Improves part quality
- Improves part finish by eliminated dragging and stretching
- Reduces moulding pressure and temperature
- Reduction in part weight due to lower packing pressures
- Does not migrate to part surface
- Can be used for virtually any moulded material
- Kits include everything for the application
- Non-toxic

Changing Colour?

NSF®

MOULDPRO PURGING COMPOUNDS

Benifits:

Universal Application
Mouldpro offers cleaning compounds for any polymer application. Choose between Ready-to-use or pure Concentrate.

Econonmical and Effecient
All our cleaning compounds offer best cleaning process and lowest cleaning price.

ASK ONE OF OUR PURGING EXPERTS TODAY FOR MORE INFORMATION

PURGING COMPOUND

Purging Compound

Part No.	Product	Size	Injection Moulding	Blow Moulding	Pass filter	Hot runner suitable	NSF registered	Polyolefins	PS	SAN, ABS, ASA	PVC	PTFE, PVDF	PMMA	POM	PA6, PA66, PA610, PA11, PA12	PC, PC/ABS	PET, PBT	PPO, PEEK, PPS, PES, PSU, LCP	CA, CAB, CP	TPU,TPE	Temperature range high 300C	Temperature range 120-300C
MC200	MasterClean	20 kg	•	□	•	•	•	•	•	•	○	•	•	•	•	○	•		•	•	□	•
MP1X	MultiPurge	1 kg	•	•	•	•	•	•	•	•	•	•	•	•	•	•	•	•	•	•	•	•
MP5X	MultiPurge	5 kg	•	•	•	•	•	•	•	•	•	•	•	•	•	•	•	•	•	•	•	•
MP10X	MultiPurge	10 kg	•	•	•	•	•	•	•	•	•	•	•	•	•	•	•	•	•	•	•	•
MP20X	MultiPurge	20 kg	•	•	•	•	•	•	•	•	•	•	•	•	•	•	•	•	•	•	•	•

Ready to use Compounds. Safe and fast cleaning of screws, cylinders and nozzles.

• Highly recommended
○ Medium recommended
□ Suitable

MasterClean

Ready-to-use granular purging compound for the cleaning of screws, cylinders, machine nozzles and hot runners.

Features

- Quick Colour Changes
- Quick Material Changes
- Effective removal of Carbon (Black Spots)
- Effective Shut Down Medium for Heat Sensitive Materials

Benefits

- Easy to Use – Follow the simple Instructions.
- Reduced Downtime – Fast and Effective Operation means faster changeovers.
- Non Abrasive – Our purging compound is a high grade polymer with additives containing no abrasives.
- Clean – A high quality product that generates No Smoke, Vapour or Odours during operation.
- Economical – Only a small amount of purging compound is required this combined with Fast and Effective Operation means lower downtime and increases productivity.
- NSF registered.

MultiPurge

MultiPurge is a cleaning compound concentrate in pellets, which can be mixed (10%) with any type of virgin thermoplastics, especially engineered to clean barrel, screw, nozzle and hot runners from carbon residuals, deposits, incrustations in changing colour and material.

ONE Purge Agent for ALL Polymers!

By mixing with virgin materials, the original temperature settings can be used to ensure optimized cleaning conditions.

- Temperature range: 80°C up to 420°C.
- MultiPurge is odorless, non-toxic; it doesn't contain solvents and it isn't abrasive.
- All components of MultiPurge are qualified as Generally Recognized as Safe (GRAS) by FDA.
- MultiPurge is environmentally safe.
- MultiPurge is EXTREMELY economical.
- NSF registered.

Maintenance Socks

Part No.	Size	Pack Absorbency	
MMS120	8cm x 120cm	75L	1

Features
- Suitable for oil and water
- Size, 8cm x 120cm
- Pack absorbency, 75l
- 15 Socks

Maintenance Roll

Part No.	Size	Pack Absorbency	
MMR40	50cm x 40m	76L	1

Features
- Suitable for oil and water
- Size 38cm x 46m
- Pack absobency 76l
- 1 roll

Maintenance Pads

Part No.	Size	Pack Absorbency	
MMP100	40cm x 50cm	85L	1

Features
- Suitable for oil and water
- Size, 40cm x 50cm
- Pack absorbency, 85l
- 100 Pads

TEMPERATURE CONTROL

04.

125 HOT RUNNER CONTROLLER

128 HEATER BANDS

131 THERMOCOUPLES

133 CONNECTORS

144 CABLE GLANDS

145 CABLES

147 CABLE CUTTER AND STRIPPER

148 THERMOMETERS

150 THERMAL CAMERAS

Compact and smart controller for 6 or 12 zones.

- Precise control the temperature in the hot runner system, improve production efficiency, reduce production costs, and ensure stability and quality during the injection moulding process.
- 7" LCD display with touch panel which can display real-time temperature and other control parameters, such as: mould leakage detecting, synchronous heat up and cool down, mold memory, group setup function, power balance detection and display, self diagnosis log.
- It also supports injection machine connect for I/O function and optional VNC function, achieving intelligent one-stop production control.

1. Thermocouple type: J/K
2. Temperature unit: °C/°F
3. Heating mode selectable
4. The maximum drive current is 15 ampere for each zone
5. Temperature PID control
6. Zero cross/Phase angle output trigger modes
7. Auto detect the frequency of power source
8. The current detect and display
9. The output with auto/manual setting
10. The soft-start for dehumidification
11. Boost
12. Standby
13. Output mode: Stop/Manual/Slave/continually selectable when Thermo-coupler broken
14. Overload protection for electric Overload protect for heating output
15. The protect mode of power source when wrong input
16. Auto shutdown when abnormal work on module
17. The fast fuse used to protect TRIAC

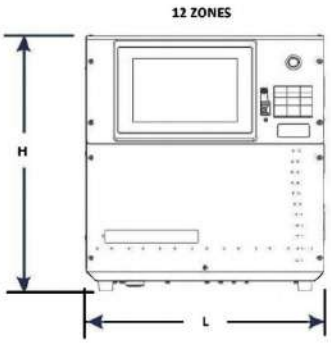

Part No.	Zones	H	L	Power supply	Cable	Cable-Connector Type
HRC600	6	18,3	33,7	400 VAC/3Phase/N/E	3 M	24 x 1 - CHI24/CNEF24
HRC1200	12	36,3	33,7	400 VAC/3Phase/N/E	3 M	24 x 2 - CHI24/CNEF24

Wiring Connector Assignment example (24 x 1)

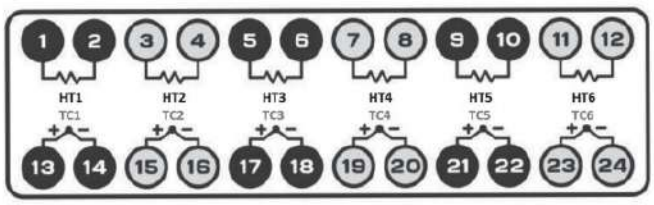

HT = Heater
TC = Thermocouple

HOT RUNNER CONTROLLER

The advanced modules which include current monitoring as standard have the following features:

- Dehumidying Soft Start
- Triple-line LED display
- Auto / Manual Output Function
- PID Auto Tune Temperature Control
- Max Current Output 15A
- Current Measurement Display
- Power Output Percentage Display
- Thermocouple J/K Type
- Temperature scale °F/°C Switchable
- Selectable Alarm Modes
- 380-400VAC/3Phase/N/Earth
- CE Marked
- Supplied Complete with 3m Cable Set
- Phase Angle Output Mode
- Zero Cross output Mode
- Fuse Failure Indicator
- Heater Break Detection
- Power Frequency Auto-Detection (50/60Hz)
- Thermocouple Failure Detection
- Thermocouple Reverse Detection
- Current Monitoring Display
- Alarm Output Option
- RS485 Output Option

Wiring Connector Assignment example (24 x 1)

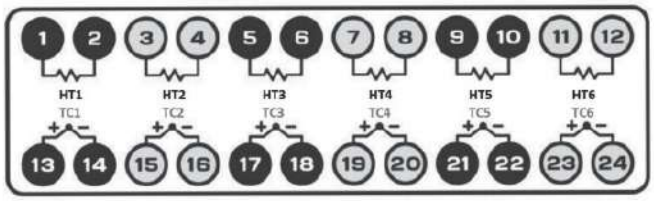

HT = Heater
TC = Thermocouple

Hot Runner Controller Units

(HRC006)

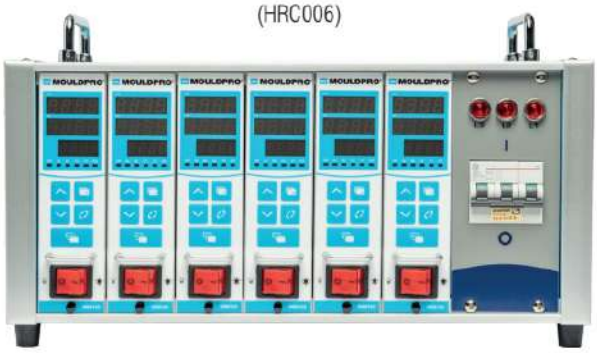

(HRC001)

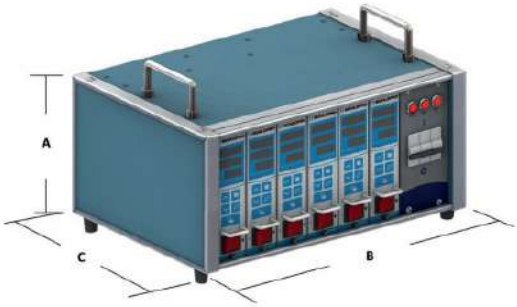

Part No.	Number Zones	Cabinet Dimensions A	B	C	Cable/Connector Type
HRC001	Single Zone	188	96	248	1 x 4 pin - CKAX03I/CKF04
HRC002	2 Zones	215	224	299	1 x 16 pin - CHI16/CNEF16
HRC004	4 Zones	215	325	299	1 x 16 pin - CHI16/CNEF16
HRC006	6 Zones	215	427	299	1 x 24 pin - CHI24/CNEF24
HRC008	8 Zones	215	529	299	2 x 16 pin - CHI16/CNEF16
HRC012	12 Zones	215	733	299	2 x 24 pin - CHI24/CNEF24

Spare Module

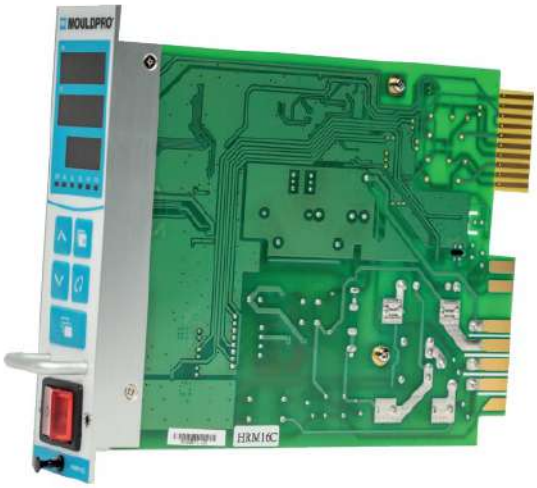

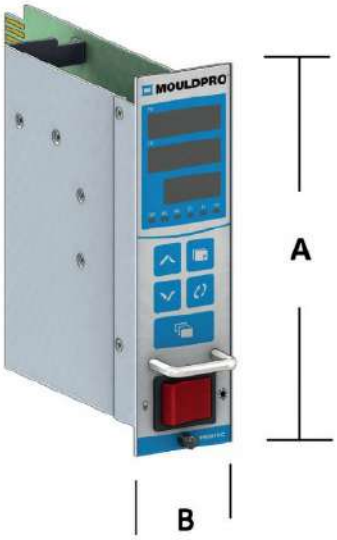

Part No.	Number Zones	A	B
HRM15C	Single Zone	176	50

Nozzle Heater Selection Guide

Mouldpro offers two types of nozzle band heaters, for reliable and powerful heating of the nozzles on injection moulding machines. Both heater types are CE marked and made of premium quality materials.

	NHB Type	Z17 Type
Application		
Wattage Load	6 W/cm²	8 W/cm²
Working Temperatures	370°C	400°C
Standard Voltage feeding	230 V.	230 V.
Cable Type	SS-Bipolar	SS-Bipolar+ Earth
Cable Length	1000 mm.	1000 mm.
Cable Exit	Super Flex	45°
Insulation	Mica	Mica
Sealed construction	No	Yes
Lifetime	✓	✓✓✓

The NHB Type is normally used when space around the nozzle is limted (near gate or hotrunners) and the flexible cables allows compact installation.The electric connection between the heater and the feeding cables is integrated into the internal heating element.

The high quality Stainless Steel sealed heater is the perfect solution, when high performance and power is required. The Z17 heaters are made of Stainless Steel Tube which ensures a solid construction and is resistant to corrosive action and and hermetically sealed to avoid any plastic seepage.

Stainless Steel Nozzle Heaters

STAINLESS STEEL

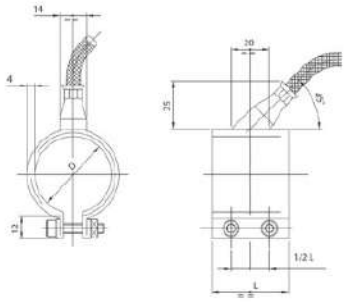

Part No.	Ø ID	Length	Watt
Z17025030	25	30	130
Z17030020	30	20	100
Z17030025	30	25	130
Z17030030	30	30	170
Z17030035	30	35	200
Z17030040	30	40	230
Z17035025	35	25	160
Z17035030	35	30	200
Z17035035	35	35	240
Z17035040	35	40	270
Z17035045	35	45	310
Z17040020	40	20	160
Z17040025	40	25	190
Z17040030	40	30	230
Z17040035	40	35	270
Z17040040	40	40	310
Z17040045	40	45	350
Z17045025	45	25	210
Z17045030	45	30	260
Z17045035	45	35	310
Z17045040	45	40	350
Z17045045	45	45	400
Z17045050	45	50	450
Z17045055	45	55	490
Z17050020	50	20	190
Z17050025	50	25	240
Z17050030	50	30	290
Z17050035	50	35	340
Z17050040	50	40	390
Z17050050	50	50	500
Z17050060	50	60	600
Z17055020	55	20	210
Z17055025	55	25	270
Z17055030	55	30	320
Z17055035	55	35	380
Z17055040	55	40	430
Z17055050	55	50	540
Z17060020	60	20	230
Z17060025	60	25	290
Z17060030	60	30	350
Z17060035	60	35	410
Z17060040	60	40	470
Z17060050	60	50	600
Z17060060	60	60	720
Z17065020	65	20	250
Z17065025	65	25	320
Z17065030	65	30	380
Z17065035	65	35	450
Z17065040	65	40	520
Z17065050	65	50	650

Part No.	Ø ID	Length	Watt
Z17070020	70	20	270
Z17070025	70	25	340
Z17070030	70	30	410
Z17070035	70	35	490
Z17070040	70	40	560
Z17070050	70	50	700
Z17070060	70	60	840
Z17075020	75	20	290
Z17075025	75	25	370
Z17075030	75	30	440
Z17075035	75	35	520
Z17075040	75	40	560
Z17075050	75	50	750
Z17075060	75	60	900
Z17080020	80	20	310
Z17080025	80	25	390
Z17080030	80	30	470
Z17080035	80	35	560
Z17080040	80	40	640
Z17080050	80	50	800
Z17080060	80	60	960
Z17085020	85	20	330
Z17085025	85	25	420
Z17085030	85	30	500
Z17085035	85	35	590
Z17085040	85	40	680
Z17085050	85	50	850
Z17085060	85	60	1020
Z17090020	90	20	350
Z17090025	90	25	440
Z17090030	90	30	540
Z17090035	90	35	630
Z17090040	90	40	720
Z17090050	90	50	900
Z17090060	90	60	1080
Z17095020	95	20	370
Z17095025	95	25	470
Z17095030	95	30	570
Z17095035	95	35	660
Z17095040	95	40	760
Z17095050	95	50	950
Z17095060	95	60	1150
Z17100020	100	20	380
Z17100025	100	25	500
Z17100030	100	30	600
Z17100035	100	35	700
Z17100040	100	40	800
Z17100050	100	50	1000
Z17100060	100	60	1200

Sealed nozzle heater high Wattage.
Supplied with 1000 mm Lead.
230 V. Working Temperature max 380/400°C.

HEATER BANDS

Mica Nozzle Heaters

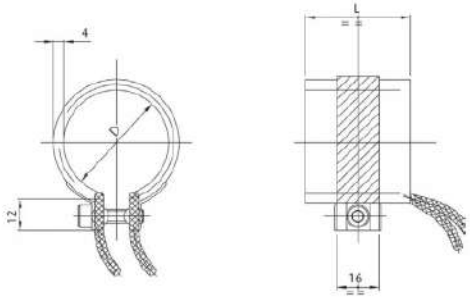

Part No.	Ø ID	Length	Watt
NHB25x25	25	25	120
NHB25x30	25	30	120
NHB25x32	25	32	120
NHB25x35	25	35	130
NHB25x38	25	38	140
NHB25x40	25	40	150
NHB25x45	25	45	165
NHB25x50	25	50	180
NHB30x25	30	25	120
NHB30x30	30	30	130
NHB30x32	30	32	140
NHB30x35	30	35	150
NHB30x38	30	38	160
NHB30x40	30	40	175
NHB30x45	30	45	200
NHB30x50	30	50	220
NHB32x25	32	25	115
NHB32x30	32	30	140
NHB32x32	32	32	150
NHB32x35	32	35	160
NHB32x38	32	38	175
NHB32x40	32	40	180
NHB32x45	32	45	200
NHB32x50	32	50	230
NHB35x25	35	25	130
NHB35x30	35	30	150
NHB35x32	35	32	160
NHB35x35	35	35	175
NHB35x38	35	38	190
NHB35x40	35	40	200
NHB35x45	35	45	225
NHB35x50	35	50	250

Part No.	Ø ID	Length	Watt
NHB38x25	38	25	140
NHB38x30	38	30	160
NHB38x32	38	32	170
NHB38x35	38	35	190
NHB38x38	38	38	200
NHB38x40	38	40	225
NHB38x45	38	45	270
NHB38x50	38	50	275
NHB40x25	40	25	140
NHB40x30	40	30	175
NHB40x32	40	32	180
NHB40x35	40	35	200
NHB40x38	40	38	220
NHB40x40	40	40	230
NHB40x45	40	45	250
NHB40x50	40	50	280
NHB45x25	45	25	160
NHB45x30	45	30	185
NHB45x32	45	32	200
NHB45x35	45	35	225
NHB45x38	45	38	200
NHB45x40	45	40	250
NHB45x45	45	45	275
NHB45x50	45	50	325
NHB50x25	50	25	180
NHB50x30	50	30	220
NHB50x32	50	32	235
NHB50x35	50	35	250
NHB50x38	50	38	280
NHB50x40	50	40	300
NHB50x45	50	45	325
NHB50x50	50	50	375

Mica insulated heater. Supplied with 1000 mm Lead 230 V.
Working Temperature max 350/370°C.

Thermocouple Leaf Type

Part No.	Length	Width	Type	Leads
TLC	20	10	J	1000 mm

Thermocouple leaf type, ideal for nozzle bands.
Leads: 1000 mm.

Threaded Type

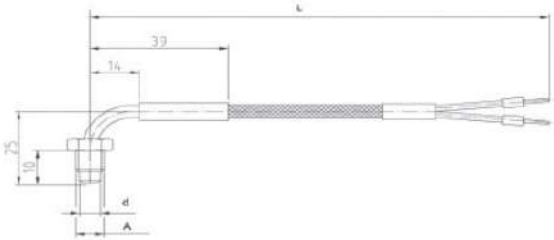

Part No.	d	D	L
MTT602000	6	M8x1	2500

Fe-CuNi, Type J, max temperature 400°C.

Surface Washer Type

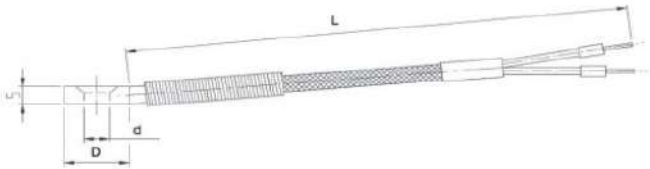

Part No.	d	D	L
MTS602000	6,5	16	2500

Fe-CuNi, Type J, max temperature 400°C.

Pin Type

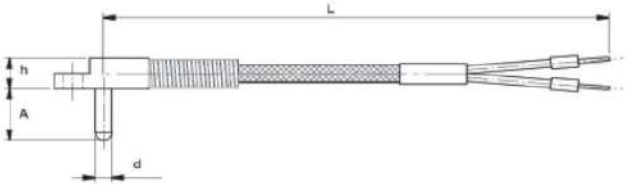

Part No.	d	A	h	L
MTP402000	4	12	8	2500

Fe-CuNi, Type J, max temperature 400°C.

THERMOCOUPLES

Bayonet - 2 pins

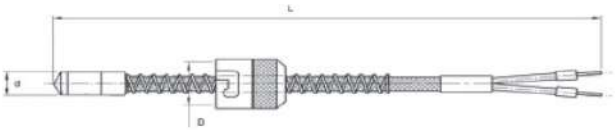

Part No.	d	D	L
MTB48102000	4,8	11	2500
MTB60102000	6	11	2500
MTB60122000	6	12,8	2500
MTB60142000	6	15	2500
MTB80122000	8	12,8	2500
MTB80142000	8	15	2500

Fe-CuNi, Type J, max temperature 400°C.

Adaptors

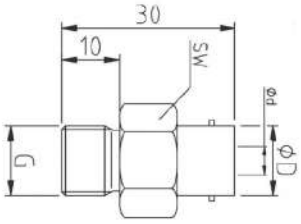

Part No.	øD	ød	SW	G
MTA12M10X1	12	7,1	17	M10x1
MTA12M12X1	12	8,2	16	M12x1
MTA12M12X1,75	12	8,2	16	M12x1,75
MTA12M14x1,5	12	8,2	16	M14x1,5
MTA12G3/8	12	8,2	17	G3/8
MTA14M10X1	14	7,1	17	M10x1
MTA14M12X1	14	8,2	17	M12x1
MTA14M12X1,75	14	8,2	17	M12x1,75
MTA14M14X1,5	14	8,2	17	M14x1,5
MTA14G1/4	14	8,2	17	G1/4
MTA14G3/8	14	8,2	17	G3/8

Extended Adaptors

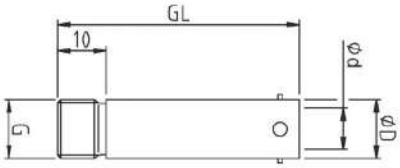

Part No.	øD	ød	G	GL
MTG10M10X1	10	7,1	M10x1	30
MTG10M10X1,5	10	7,1	M10x1,5	30
MTG10G1/8	11	6,3	G1/8	30
MTG12M10X1	12	7,1	M10x1	50
MTG12M10X1,5	12	7,1	M10x1,5	50
MTG12M12X1	12	8,2	M12x1	50
MTG12M12X1,75	12	8,2	M12x1,75	50
MTG12M14X1,5	12	8,2	M14x1,5	50
MTG14M12X1	14	9	M12X1	50
MTG14M14x1,5	14	9	M14x1,5	50

Multipole Connectors

134 SQUARE CONNECTORS

135 NARROW CONNECTORS

138 STANDARD CONNECTORS

142 HIGH DENSITY CONNECTORS

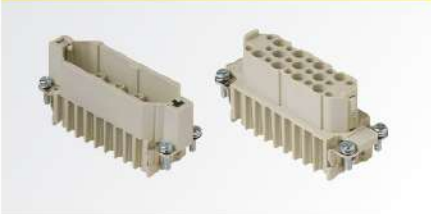

High quality connectors, compatible with Industry Standard (equivalent products from other manufacturers)

- CE marked
- UL/CSA approved
- Quality Screw terminals
- Cost efficient
- Full range
- Protection standard: IP20
- Seals: NBR
- Temperature range: 125°C (CK type only 100°C)

SQUARE CONNECTORS

Inserts Male

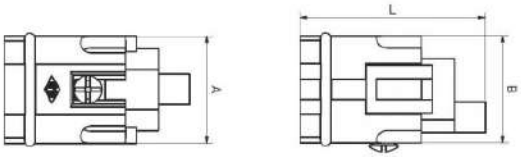

Part No.	# Poles	A	B	L	Size
CKM03	3+E	21	21	30,5	21.21
CKM04	4+E	21	21	36,5	21.21

Inserts Female

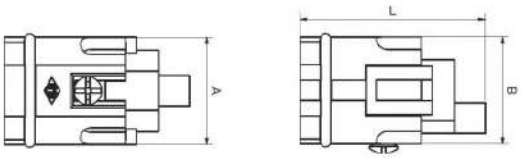

Part No.	# Poles	A	B	L	Size
CKF03	3+E	21	21	30,5	21.21
CKF04	4+E	21	21	36,5	21.21

Straight Hood

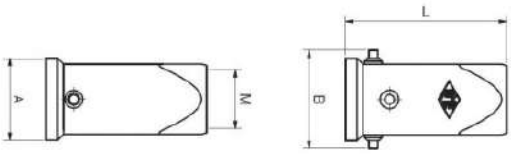

Part No.	# Poles	Levers	A	B	L	M	Size
MKAV20	3/4+E	Single	28	33,5	60,5	M20	21.21

Panel Mount Base

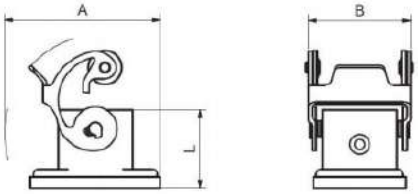

Part No.	# Poles	Levers	A	B	L	Size
CKAX03I	3/4+E	Single	57,5	32	24	21.21

Straight Hood, Single Lever

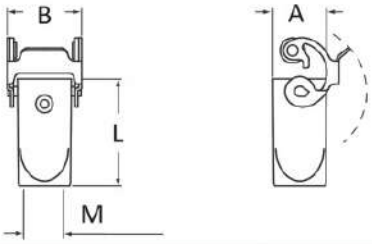

Part No.	# Poles	Levers	A	B	L	Size
MKAXVG20	3/4+E	Single	24	33	51,5	21.21

Inserts Male, Screw Terminals

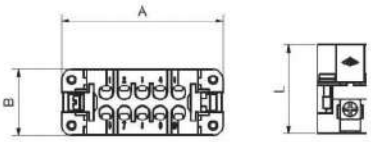

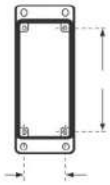

Part No.	# Poles	A	B	L	Size
CDAM10	10 Pole	56,5	23	31	49.16
CDAM16	16 Pole	73	23	31	66.16

Inserts Female, Screw Terminals

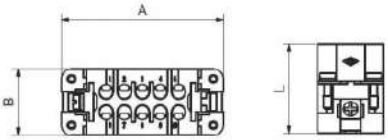

Part No.	# Poles	A	B	L	Size
CDAF10	10 Pole	56,5	23	31	49.16
CDAF16	16 Pole	73	23	31	66.16

Inserts Male, Screw Terminals

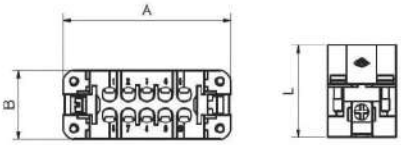

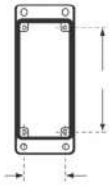

Part No.	# Poles	Pin #	A	B	L	Size
CDAM16	16 Pole	1-16	73	23	31	66.40
CDAM16N	16 Pole	17-32	73	23	31	

Inserts Female, Screw Terminals

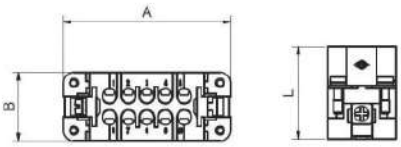

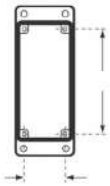

Part No.	# Poles	Pin #	A	B	L	Size
CDAF16	16 Pole	1-16	73	23	31	66.40
CDAF16N	16 Pole	17-32	73	23	31	

NARROW CONNECTORS

Top Entry Hood, Single Lever

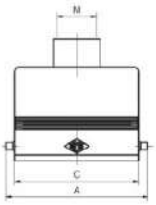

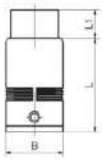

Part No.	# Poles	Levers	A	B	C	L	L1	M	Size
MZAV15L20	10 Pole	Single	72	36	63	64,5	14,5	M20	49.16
MZAV25L20	16/25 Pole	Single	88,5	36	79,5	70,5	14,5	M20	66.16
MZAV25L25	16/25 Pole	Single	88,5	36	79,5	70,5	14,5	M25	66.16

Side Entry Hood, Single Lever

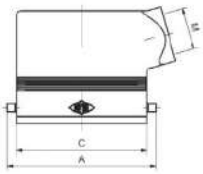

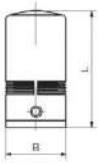

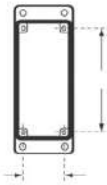

Part No.	# Poles	Levers	A	B	C	L	M	Size
MZO15L20	10 Pole	Single	72	29,4	63	55,9	M20	49.16
MZO25L25	16 Pole	Single	88,5	29,4	79,5	55,9	M25	66.16

Panel Mount Housing, Single Lever

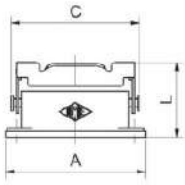

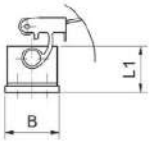

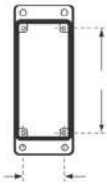

Part No.	# Poles	Levers	A	B	C	L	Size
CZI15L	10 Pole	Single	83	32	76	44	49.16
CZI25L	16/25 Pole	Single	98	32	93	44	66.16

Surface Mount Housing, Single Lever

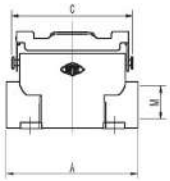

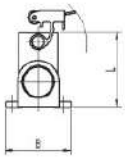

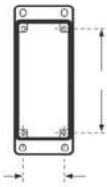

Part No.	# Poles	Levers	A	B	C	L	M	Size
MZP15L25	10 Pole	Single	85	50	76	52	M25	49.16
MZAP25L25	16/25 Pole	Single	101	50	93	57	M25	66.16

Top Entry Hood, Double Lever

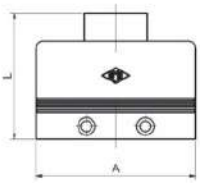
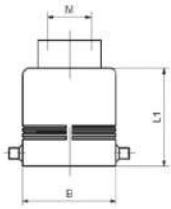

Part No.	# Poles	Levers	A	B	L	L1	M	Size
MAV50.32	32 Pole	Double	82	56	90,5	75	M32	66.40

Side Entry Hood, Double Lever

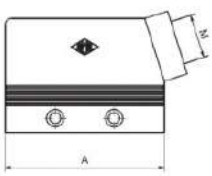
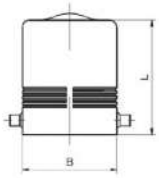

Part No.	# Poles	Levers	A	B	L	M	Size
MAO50.32	32 Pole	Double	82	56	75	M32	66.40

Surface Mount Base, Double Lever

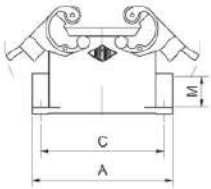
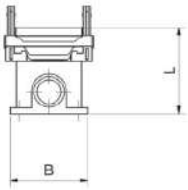
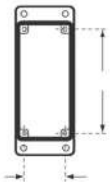

Part No.	# Poles	Levers	A	B	C	L	M	Size
MHP50.32	32 Pole	Double	106	57,3	94	82	M32	66.40

Panel Mount Base, Double Lever

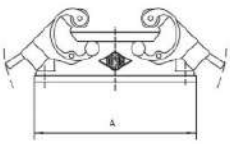
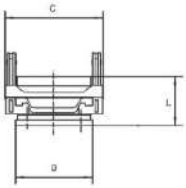
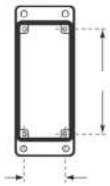

Part No.	# Poles	Levers	A	B	C	L	Size
CHI50	32 Pole	Double	104	58,5	71	29	66.40

STANDARD CONNECTORS

Inserts Male

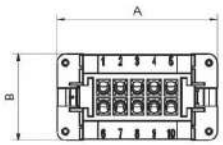

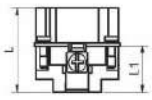

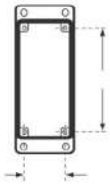

Part No.	# Poles	A	B	L	L1	Size
CNEM06T	6 Pole	50	34	33	18	44.27
CNEM10T	10 Pole	63,4	34	33	18	57.27
CNEM16T	16 Pole	83,5	34	33	18	77.27
CNEM24T	24 Pole	110,3	34	33	18	104.27

Inserts Female

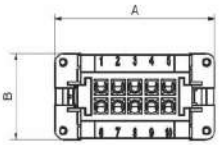

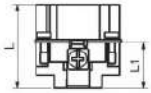

Part No.	# Poles	A	B	L	L1	Size
CNEF06T	6 Pole	50	34	33	18	44.27
CNEF10T	10 Pole	63,4	34	33	18	57.27
CNEF16T	16 Pole	83,5	34	33	18	77.27
CNEF24T	24 Pole	110,3	34	33	18	104.27

Inserts Male

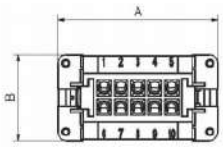

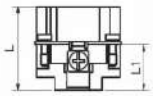

Part No.	# Poles	Pin #	A	B	L	L1	Size
CNEM16T	16 Pole	1-16	83,5	34	33	18	77.62
CNEM16TN	16 Pole	17-32	83,5	34	33	18	
CNEM24T	24 Pole	1-16	110,3	34	33	18	104.62
CNEM24TN	24 Pole	17-32	110,3	34	33	18	

Inserts Female

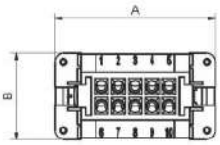

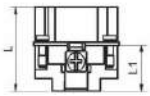

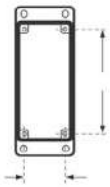

Part No.	# Poles	Pin #	A	B	L	L1	Size
CNEF16T	16 Pole	1-16	83,5	34	33	18	77.62
CNEF16TN	16 Pole	17-32	83,5	34	33	18	
CNEF24T	24 Pole	1-24	110,3	34	33	18	104.62
CNEF24TN	24 Pole	25-48	110,3	34	33	18	

Top Entry Hood, Single Lever

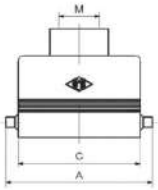

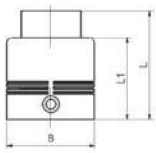

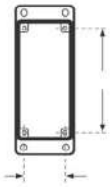

Part No.	# Poles	Levers	A	B	C	L	L1	M	Size
MHV06L20	6 Pole	Single	72	43	60	53	40	M20	44.27
MHV10L20	10 Pole	Single	87	43	73	58	45	M20	57.27
MHV16L25	16 Pole	Single	108	43	93,5	58	45	M25	77.27
MHV24L32	24 Pole	Single	135	43	120	68	55	M32	104.27
MHV48L32	48 Pole	Single	150,5	90	121	121	98	M40	104.62

Side Entry Hood, Single Lever

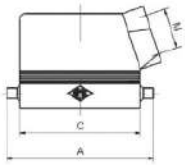

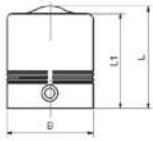

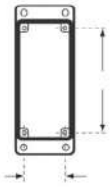

Part No.	# Poles	Levers	A	B	C	L	L1	M	Size
MHO06L20	6 Pole	Single	73	43	60	50,4	47	M20	44.27
MHO10L20	10 Pole	Single	87	43	73	52	49	M20	57.27
MHO16L25	16 Pole	Single	108	43	93,5	63	60	M25	77.27
MHO24L32	24 Pole	Single	135	43	120	63	60	M32	104.27
MHO48L32	48 Pole	Single	150,5	90	121	98	118	M40	104.62

Panel Mount Base, Single Lever

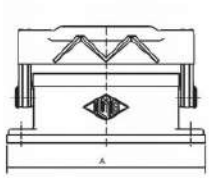

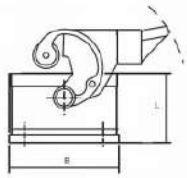

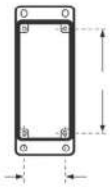

Part No.	# Poles	Levers	A	B	L	Size
CHI06L	6 Pole	Single	82,5	45,5	29	44.27
CHI10L	10 Pole	Single	95,5	45,5	29	57.27
CHI16L	16 Pole	Single	115,5	45,5	29	77.27
CHI24L	24 Pole	Single	142,5	45,5	29	104.27
CHI48L	48 Pole	Single	167,5	93	42	104.62

STANDARD CONNECTORS

Surface Mount Base, Single Lever

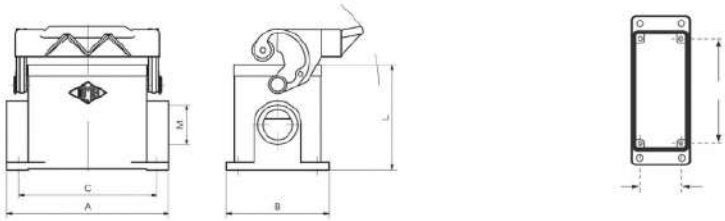

Part No.	# Poles	Levers	A	B	C	L	M	Size
MHP06L20	6 Pole	Single	82	52	70	53	M20	44.27
MHP10L20	10 Pole	Single	93,5	52	82	57	M20	57.27
MHP16L25	16 Pole	Single	117	57	105	63	M25	77.27
MHP24L25	24 Pole	Single	144	57	132	63	M25	104.27

Surface Mount Base, Single Lever and Cover

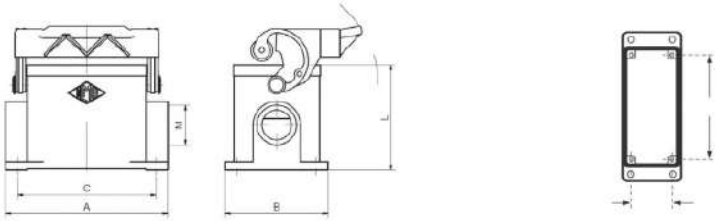

Part No.	# Poles	Levers	A	B	C	L	M	Size
MHP48LS40	48 Pole	Single	141	120	111	99	M40	104.62

Top Entry Hood, Double Lever

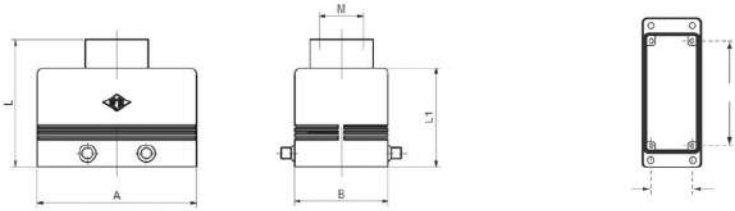

Part No.	# Poles	Levers	A	B	L	L1	M	Size
MHV10.20	10 Pole	Double	73	43	58	45	M20	57.27
MHV16.25	16 Pole	Double	93,5	43	58	45	M25	77.27
MHV24.32	24 Pole	Double	120	43	68	55	M32	104.27
MHV32.32	32 Pole	Double	93,5	82,5	117	94	M32	77.62

Side Entry Hood, Double Lever

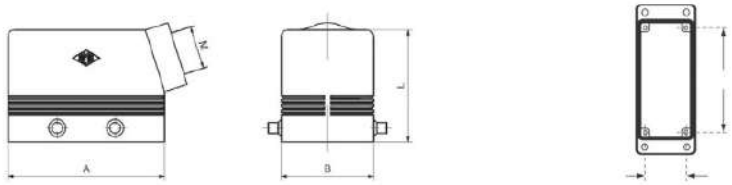

Part No.	# Poles	Levers	A	B	L	M	Size
MHO10.20	10 Pole	Double	73	43	52	M20	57.27
MHO16.25	16 Pole	Double	93,5	43	63	M25	77.27
MHO24.32	24 Pole	Double	120	43	63	M32	104.27
MHO32.32	32 Pole	Double	93,5	82,5	94	M32	77.62

Panel Mount Base, Double Lever

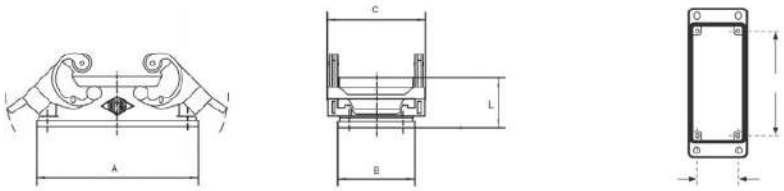

Part No.	# Poles	Levers	A	B	C	L	Size
CHI10	10 Pole	Double	95,5	45,5	58	29	57.27
CHI16	16 Pole	Double	115,5	45,5	58	29	77.27
CHI24	24 Pole	Double	142,5	45,5	58	29	104.27
CHI32	32 Pole	Double	126	45,5	98,5	35	77.62

Surface Mount Base, Double Lever

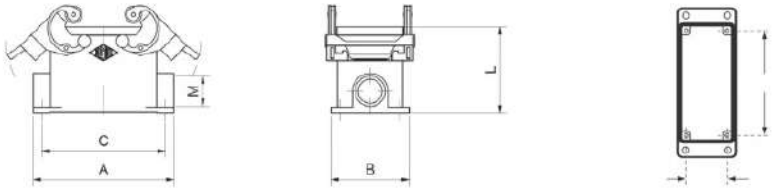

Part No.	# Poles	Levers	A	B	C	L	M	Size
MHP10.20	10 Pole	Double	93,5	52	82	57	M20	57.27
MHP16.25	16 Pole	Double	117	57	105	63	M25	77.27
MHP24.25	24 Pole	Double	144	57	132	63	M25	104.27
MHP32.40	32 Pole	Double	125	84	112	90	M40	77.62

HIGH DENSITY CONNECTORS

Inserts Male, 3 Row, High Density Crimp Terminal

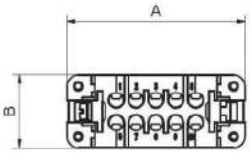

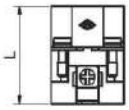

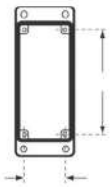

Part No.	# Poles	A	B	L	Size
CDM25	25 Pole	73	23	31	66.16

Inserts Female, 3 Row, High Density Crimp Terminal

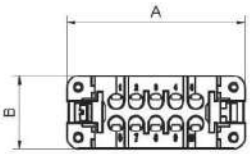

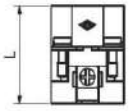

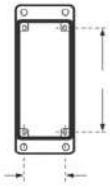

Part No.	# Poles	A	B	L	Size
CDF25	25 Pole	73	23	31	66.16

Crimp Pins

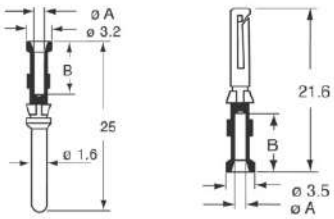

Part No.	Type	Wire Size	ø-A	ø-B
CDMA0.5	Male	0,5 mm²	1,1	8
CDFA0.5	Female	0,5 mm²	1,1	8
CDMA1.5	Male	1,5 mm²	1,8	8
CDFA1.5	Female	1,5 mm²	1,8	8

Top Entry Hood, Single Lever

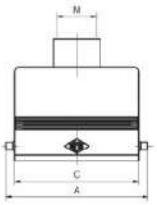
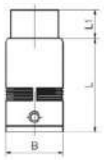

Part No.	# Poles	Levers	A	B	C	L	L1	M	Size
MZAV25L20	16/25 Pole	Single	88,5	36	79,5	70,5	14,5	M20	66.16
MZAV25L25	16/25 Pole	Single	88,5	36	79,5	70,5	14,5	M25	66.16

Side Entry Hood, Single Lever

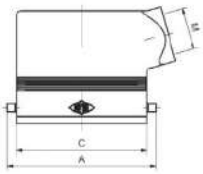
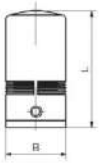

Part No.	# Poles	Levers	A	B	C	L	M	Size
MZO25L25	16/25 Pole	Single	88,5	29,4	79,5	55,9	M25	66.16

Panel Mount Housing, Single Lever

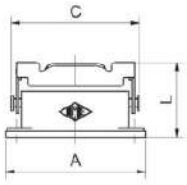
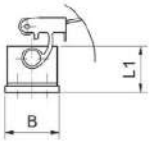
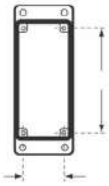

Part No.	# Poles	Levers	A	B	C	L	Size
CZI25L	16/25 Pole	Single	98	32	93	44	66.16

Surface Mount Housing, Single Lever

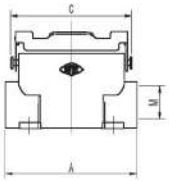
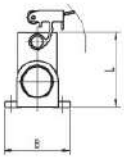

Part No.	# Poles	Levers	A	B	C	L	M	Size
MZAP25L25	16/25 Pole	Single	101	50	93	57	M25	66.16

CABLE GLANDS

Cable Glands Polyamide

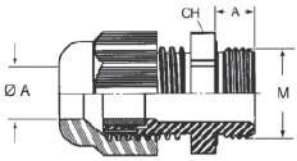

Part No.	Ø A (mm)	M	CH	A	
ASM20I	5-12,5	M20	24	10	1
ASM25I	9-18	M25	33	10	1
ASM32I	14-25	M32	42	10	1

A Polyamide based cable gland, designed for universal use.

Benefits
High oil-resistance for maximum reliability. Wide, variable clamping ranges. Permanent vibration protection. Optimum strain relief.

Cable Glands Polyamide - with Spiral Strain Relief

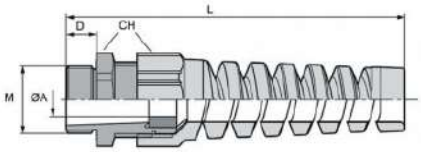

Part No.	Ø A (mm)	M	CH	L	D	
CGSS20	7-13	M20	24	101	8	1
CGSS25	9-17	M25	33	125	9	1
CGSS32	11-22	M32	42	149	10	1

Plastic cable gland with bending and anti-kink protection, to protect flexible cables, for moving machine parts.

Benefits
Reliable bending and anti-kink protection. Functional reliability. Cable conservation. To protect flexible cables.

Cable Glands

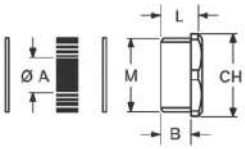

Part No.	Ø A (mm)	M	CH	L	B	
AGM20T	6-10	M20	20	10,5	7,5	1
AGM25T	11-17	M25	25	11,5	8	1
AGM32T	19-24	M32	32	12	8	1

Metal cable gland with gasket to ensure sealed connection between cable and connector.

Benefits
IP65. Nickel plated brass gland. Galvanised steel washers. Temperature range: -25°C - +100°C. Anti-ageing rubber gaskets.

Cable Glands

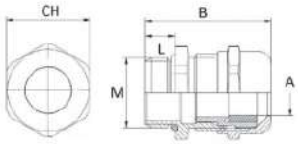

Part No.	Ø A (mm)	M	CH	L	B	
ASM20P	6-12,5	M20	22	7	29	1
ASM25P	10-18	M25	30	8	37	1
ASM32P	14-24	M32	40	8,5	45	1

Metal cable gland with gasket to ensure sealed connection between cable and connector.

Benefits
IP65. Nickel plated brass gland. Temperature range: -25°C - +120°C. Anti-ageing rubber gaskets.

Powerflex Cable

Part No.	Zones	Cores	Coil Length
PF08	8	16+E	20m
PF12	12	24+E	20m

Multicore Power Cable.
1.5mm² 16A Cable.
Numbered Cores, Green/Yellow Earth.

Thermoflex Cable

Part No.	Zones	Cores	Coil Length
TF08	8	8 Pair+E	20m
TF12	12	12Pair+E	20m

Multi-core Thermocouple Cable.
Type J Fe/Cu-Ni. Twisted Pairs.
DIN Standard Colours (Black/White), Numbered Cores.
Screen and Earth.

Multiflex Cable

Part No.	Zones	Cores	Coil Length
MF06	6	12+E PWR / 6 Pair T/C	20m

6 Zone Combination power and thermocouple cable.
Extremely Flexible.
1.5mm² 16A Power Cable.
Type J Fe/Cu-Ni Thermocouple Cable, Twisted Pairs.
DIN Standard Colours (Black/White), Numbered Cores.
Screen and Earth.

High Temperature Cable

Part No.	Zones	Cores	Coil Length
CAB-P325	1	2+E	25m

Power Cable for high temperature applications including extension of heater cables.
3 x 0,75 mm².
Nickel conductors, insulated with fiberglass impregnated in silicone resin.
Galvanized steel braiding.
Working Temperature: Max 320°C.

Thermocouple Cable Type J

Part No.	Zones	Cores	Coil Length
CAB-T225	1	2	25m

Thermocouple Cable Type J FeCuNi.
2 x 0,5 mm2 Black/White.
Stainless steel braiding.
Working Temperature: Max 250°C.

Cable Cutter

Part No.	Max Cut	Length	
CC-2200	60mm²	230 mm / 9"	1

- Made of high carbon steel
- Can cut 60mm² copper wire
- Heavy duty cable cutter
- Easy to cut hard cable
- Precision cutting edge
- Drop forged and heat treated, easy to hold
- Can crimp terminal
- Length: 230mm

Wire Stripper

Part No.	Max Cut	Length	
WS-1020	0.8-2.6	156 mm	1

- Length: 156mm
- Weight: 129g
- Material of stripper: SK7 High carbon steel
- Hardness: 48-51
- Material of handle: PVC
- For wires 0.8, 1, 1.3, 1.6, 2, 2.6 mm (AWG 20#, 18#, 16#, 14#, 12#, 10#)

THERMOMETERS

Thermometer Kit

Part No.	Temperature range
826-32	-50°C to + 1300°C

Single Input K-Type thermometers offer high accuracy and fast response times; ideal for plastics processors.
-50° to +1300°.
°C / °F Selectable.
Resolution: 0.1°C / 0.1°F.
Sampling rate of 2.5 times per second.
Auto Power Off.
Supplied with carry case, rubber holster & battery.
Kit Includes: Thermometer (Single Input), Case, Needle Point Penetration Probe, Right Angle Surface probe, Batteries.

Deluxe Thermometer Kit

Part No.	Temperature range
826-33	-50°C to + 480°C/1300°C

Dual Input K-Type thermometers offer high accuracy and fast response times; ideal for plastics processors.
50° to 1300°.
°C / °F Selectable.
Resolution: 0.1°C / 0.1°F.
Sampling rate of 2.5 times per second.
Auto Power Off.
Supplied with carry case, rubber holster & battery.
Kit Includes: Thermometer (Single Input), Case, Needle Point Penetration Probe, Right Angle Surface probe, Magnetic Surface Probe, Batteries.

Thermometer

Part No.	Input	Temperature range
DT6102K	Dual	-50°C to + 1300°C

Dual Input K-Type thermometers offer high accuracy and fast response times; ideal for plastics processors.
-50° to +1300°.
°C / °F Selectable.
Resolution: 0.1°C / 0.1°F.
Sampling rate of 2.5 times per second.
Auto Power Off.
Supplied with carry case, rubber holster, bead probe & battery.

Infrared and Probe Thermometer Kit

Part No.	Temperature range
826-31	-60°C to +480°C

Ideal for all temperature measurement requirements around the mouldshop this dual purpose infrared thermometer also has a Type K thermocouple input socket.
The kit is supplied in a case complete with penetration probe and 90° ribbon surface probe. Ideal for measuring surface temperature of moulded parts, mould surface temperature or melt temperature.
Range (Infrared) -60°C to +480°C.
Range (Thermocouple) -60°C to +480°C.
Backlit LCD display.
Laser Pointer.
Auto power off (60 secs).
Adjustable Emissivity.

Handheld 90 Degree Ribbon Surface Probe

Part No.	Type	Max Temp	Lead Type
TCP-RS90-K	K	500°C	Flexible

Handheld Pentration Probe

Part No.	Type	Max Temp	Lead Type
TCP-P-K	K	500°C	Flexible

Magnetic Surface Probe

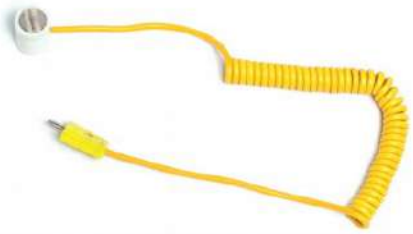

Part No.	Type	Max Temp	Lead Type
TCP-R-M	K	350°C	Flexible

THERMAL CAMERAS

Used for a multitude of temperature related applications, you can use our highly durable, fast capturing imager to help troubleshoot any possible heating and cooling problems.

Point the camera at polymer melt to get an almost instantaneous reading or even take an image of the cooling hoses and quickly identify a 'cold' hose and a possible cooling issue.

DT-870

Bluetooth

DT-986H

Bluetooth and WiFi

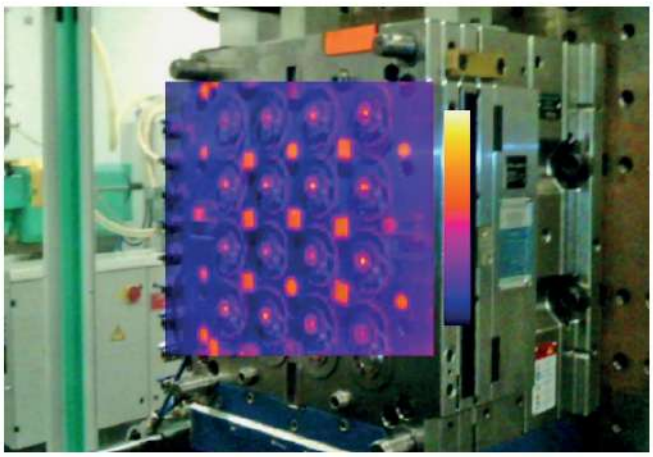

Specifications	DT-870	DT-986H
Imaging and optical data		
IR resolution	80×80 pixels	256×192 pixels
Focal Plane Array (FPA) / Spectral range	Uncooled microbolometer / 8–14 μm	Uncooled microbolometer / 8–14 μm
Focal length	7.5mm.	3,2mm
Field of View (FOV)	21x 21°	36x27°
Minimum focus distance	0.5m	0.5m
Spatial resolution	4.53mrad	3.75mrad
Thermal sensitivity/NETD	<0.1°C/100mK	<0.1°C at 30°C [86°F]/100mK
Image frequency	50Hz	25Hz
Focus	Focus Free	Focus Free
Zoom	-	1-16x continuous, digital zoom
Image presentation		
Display	2" TFT LCD, 240x320 pixels	3,5" LCD Touch, 640x480 pixels
Image modes	IR image	IR image, visual image, picture in picture, AUF
Picture in Picture	-	IR area on visual image
Color palettes	IRON/Rainbow/Grey/Grey Inverted	IRON, Rainbow, Grey, Grey Inverted, Brown, Blue-red, Hot-cold, Feather, Above alarm, Below alarm, Zone alarm, Vision zone
Measurement		
Object temperature range	-20 to 150°C / 0 to 350°C / extended to -20 to 650°C	-20 to 550°C
Accuracy	±2°C or ±2% of reading	±2°C or ±2% of reading
Measurement analysis		
Spotmeter	Center Spot	Center Spot, Auto hot or cold markers
Set-up		
Language selection	English, Chinese, French, German, Spanish	
Storage of videos/images		
Inside Memory / Storage media	Internal Storage	8Gbytes Micro SD card ar 3.4GB internal EMMC
Video storage format	-	Standard MPEG-4 encode, 640x480 at 30fps, an memory card >60 minutes
Image storage format	Bitmap (BMP)	Standard JPEG.ar HIR files including measurement data, an memory card >6000 pictures
Digital camera		
Built-in visible light digital camera	-	2 Megapixels; FOV 65°
Data communication interfaces		
Interfaces &Video output	USB-micro	USB-Type C
USB	Data	Data & Live video transform between camera and PC or smartphone
Bluetooth	Yes	Yes
WiFi		
Live video between device and PC	No	Yes
Transfer images and data to mobile devices	(Bluetooth only)	Yes
Battery / Input voltage / Laser		
	Li-ion battery, 4 hours operating time / DC 5V / < 1mW	

D-870 / D-986H

Hand-held thermal imaging camera is designed to make your work easier by providing accurate, fast and reliable temperature measurement. Simple and easy to operate the camera uses point and shoot infrared technology to produce high-quality thermal images that are displayed on the TFT screen. 50/25Hz fast frame rate enables fast capture of temperature variation where critical temperature conditions are directly displayed with automatic hot/cold spot recognition. The camera has the ability for datalogging via the internal memory while Bluetooth connectivity allows the for easy transfer of data to the user's smartphone or Bluetooth device. The smart design is robust, compact and lightweight with the camera being able to withstand drops from up to 2m.

Thermal imaging cameras may be used for a multitude of temperature related applications; use the camera around the mouldshop to measure part ejection temperature, check heater-band temperatures and also troubleshoot possible cooling problems or dryer temperatures simply by measuring the hose temperature; these may not give exact readings but, are a great way to quickly identify possible problems and are an invaluable aid to process verification. The camera will quickly identify the temperature of polymer melt temperature – giving an almost instantaneous reading – in comparison a melt probe can take up to 30 seconds for the reading to stabilise.

The built-in LED flashlight is convenient when working in dark and unlit inspection environments.
8 hour battery life with the rechargeable battery and automatic shutdown.
Easy-to-use interface, this unit is ideal for monitoring process parameters, predictive maintenance, equipment troubleshooting and verification.
The compact, rugged and lightweight design allows for optimum portability and performance, even in harsh working conditions.

D-986H

2 Megapixel built-in digital camera enables the overlaying of digital and thermal images as well as the more advanced fusion mode.
3,4 Gb internal memory (Standard MPEG-4 encode, 640x480 at 30fps, an memory card >60 minutes. video using the 8GB micro SD Card, Video output via USB or HDMI.

4 hour battery life with the rechargeable battery and automatic shutdown.
Easy-to-use interface, this unit is ideal for monitoring process parameters, predictive maintenance, equipment troubleshooting and verification.
The compact, rugged and lightweight design allows for optimum portability and performance, even in harsh working conditions.

Supplied with adaptor, battery, App software, USB cable and convenient carry case.

MATERIAL HANDLING

05.

153 LOADER HOSES

155 HOT AIR HOSES

156 HOSE CLAMPS

157 CAMLOCK COUPLINGS ALUMINUM

161 HOPPER MAGNETS

161 MATERIAL SCOOPS

162 BALANCES AND MOISTURE ANALYSER

Anti-Static PU Hose/PVC Helix

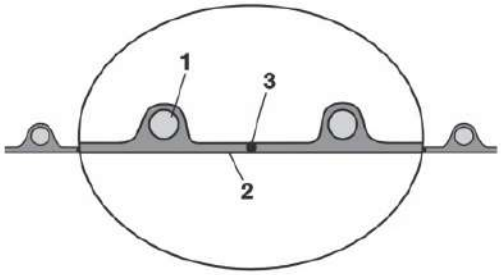

Part No.	Ø ID (mm)	Ø OD (mm)	Min Wall thickness (mm)	Bending Radius (mm)	Roll Length (m)	Wire Clip Ref
PUP25	25	31	0.5	17,5	10	3030200
PUP32	32	38	0.5	19	10	3030218
PUP38	38	44	0.5	31,0	10	3030242
PUP40	40	47	0.5	40,0	10	3030242
PUP45	45	51	0.5	42,5	10	3030250
PUP50	50	58	0.5	45,0	10	3030285
PUP60	60	71	0.5	50,0	10	3030306
PUP64	64	74	0.5	49	10	3030306

Applications:
Flexible hose/ ducting for abrasive granulate and powder.

Properties:
- Light weight.
- Abrasion-resistant.
- Microbe resistant.
- Good resistance to chemicals.
- Phthalate-free.
- Grounding wire for discharging of electrostatic charging.

Temperature range:
-20°C to 70°C.
Short time to 80°C.

Design, Material:
1. hard plastic spiral integrated in wall, spiral: rigid PVC.
2. smooth interior, wall: permanently antistatic premium ester-polyurethane (Pre-PUR®).
3. grounding wire.

PU Hose/Steel Helix

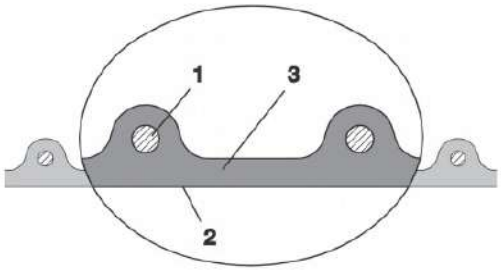

Part No.	Ø ID (mm)	Ø OD (mm)	Min Wall thickness (mm)	Roll Length (m)	Wire Clip Ref
PURH32	32	39	1,5	10	3030242
PURH38	38	49	1,5	10	3030250
PURH40	40	51	1,5	10	3030250
PURH45	45	55	1,5	10	3030269
PURH50	50	58	1,5	10	3030285
PURH60	60	70	1,5	10	3030306
PURH64	64	75	1,5	10	3030306

Applications:
- Flexible hose/ ducting for high throughput of abrasive powder, bulk material, granulate and for gases.
- Plastic industry, conveying of granulates and powders: granulate conveying device, vacuum hopper/ conveyor, suction conveyor, dosing system, bulk-bag (big bag)-charging and discharging, shredder, mill, extruder, injection moulding machine.

Properties:
- Heavy duty.
- Highly abrasion resistant.
- Increased pressure and vacuum resistance.
- Microbe resistant.
- Good resistance to oil, gasoline and chemicals.
- Very good low temperature flexibility.

Temperature range:
-40°C to 90°C.
short time to 125°C.

Design, Material:
1. copper coated spring steel wire firmly embedded in wall.
2. wall: permanently antistatic premium esterpolyurethane (Pre-PUR®).
3. wall thickness 1,4 - 1,5 mm approx.

LOADER HOSES

PVC Hose

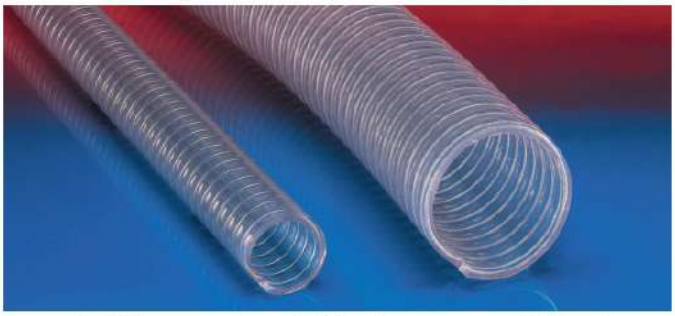

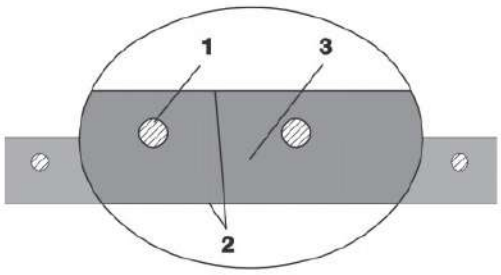

Part No.	Ø ID (mm)	Ø OD (mm)	Bending Radius	Roll Length	Clamp Ref.
PAPVC19	20	27	41	30	HDC2325
PAPVC25	25	33	73	30	HDC3134
PAPVC31	32	40,4	79,0	30	HDC3740
PAPVC38	38	47	91	30	HDC4347
PAPVC40	40	49	100	30	HDC4751
PAPVC45	45	54	118	30	HDC5155
PAPVC50	50	60	135	30	HDC5963
PAPVC64	64	74,8	228,0	30	HDC7379
PAPVC75	76	88,2	262,0	30	HDC8591

Applications:
Plastic industry, conveying of granulates and powders; granulate conveying device, vacuum hopper/ conveyor, suction conveyor, dosing system, bulk-bag (big bag)-charging and discharging, shredder, mill, extruder, injection moulding machine.

Properties:
- Heavy duty.
- Very high pressure, vacuum and compression resistance.
- Food grade wall, complies with: EU-Directive 10/2011 and EC 1935/2004 and the latest EU-Directive 2015/174, according to FDA 21 CFR, according to FDA 21 CFR, 177.1210.
- Good resistance to alkalis and acids.
- Good resistance to chemicals.
- Phthalate-free.

Temperature range:
-20°C to 70°C.
Short time to 80°C.

Design, Material:
1. spring steel wire spiral embedded in wall.
2. smooth interior and exterior, wall: high grade soft PVC.
3. wall thickness 3 to 8 mm approx., depending on diameter.

Silicon Dryer Hose

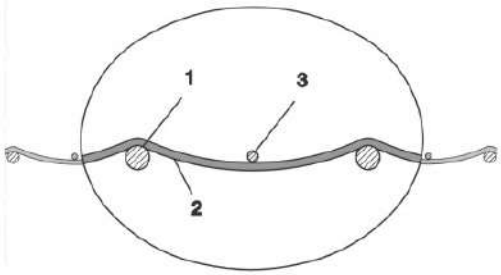

Part No.	Ø ID (mm)	Ø OD (mm)	Bending Radius	Roll Length	Clamp Ref.
SIL132	32	35	19	4	3030200
SIL138	38	42	23	4	3030226
SIL141	41	45,0	25,0	4	3030234
SIL151	51	55	30	4	3030269
SIL160	63	67	36	4	3030285
SIL170	70	74	39	4	3030306

Applications:
- Flexible hose/ ducting for hot and cold gases.
- Granulate/ plastic dryer, hot air dryer.
- Film blowing machine, cooling air at the extrusion tool.
- Air supply: UV dryer, IR dryer.
- Clean room ventilation, semiconductor production machine.

Properties:
- Fibre reinforced.
- Highly flexible.
- Very good heat resistance.
- Conforms to RoHS guideline.

Temperature range:
-70°C to 260°C.
short time to 280°C.

Design, Material:
Silicon hose.
1. spring steel wire.
2. fabric-reinforced tape, wall: Silicon coated glass fabric.
3. cord as reinforcement.

HOSE CLAMPS

Hose Clamps Heavy Duty

STAINLESS STEEL

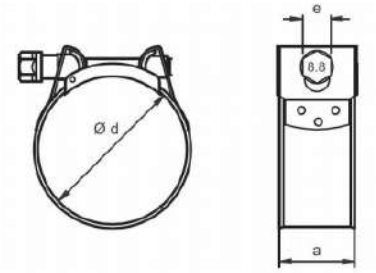

Part No.	Ø	e	a		Hose ref.
HDC2325	23-25	8	18	50	PAPVC19
HDC3134	31-34	11	20	50	PAPVC25
HDC3740	37-40	11	20	50	PAPVC31
HDC4347	43-47	11	20	50	PAPVC38-40
HDC5155	51-55	11	20	25	PAPVC45
HDC5963	59-63	11	20	25	PAPVC50
HDC7379	73-79	13	25	25	PAPVC64
HDC8591	85-91	13	25	25	PAPVC75

Wire Clip with Screw - Ideal for Loader Hoses with Outer Helix

Part No.	Size range mm
3030200	33-37
3030218	35,5-40
3030226	38,5-43
3030234	41-46
3030242	43,5-49
3030250	46,5-53
3030269	50,5-56
3030277	53,5-60
3030285	56,5-64
3030293	60-68
3030306	64-72

Wire: Steel wire
B-UNI 3823
Screw: 6.6 grade steel Cr3
zinc-plated

This clip was specially designed for use with hoses incorporating an outer helix.
It is generally used when installing ventilation ducting.
The double-wire construction of this clip means that it sits comfortably on either side of the helix and can then be clamped down firmly thanks to the screw-tightening system.

Camlock Couplings Aluminium

A range of Camlock couplings made according to A-A-59326, DIN 2828
Camlock is a safe coupling for use with hoses and pipes for many different media such as dry goods, polymer granules, cooling water, chemicals etc.
The coupling connects easily by opening the wings, inserting the male part and then closing the wings by hand.

Body material: Aluminium A356 or A104
Handle material: Brass
Sealing: NBR

Hose Tail Lever Coupling Type C

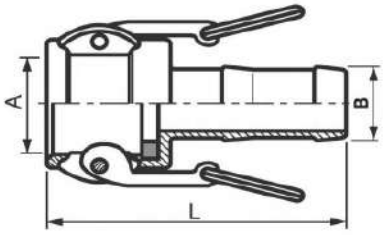

Part No.	Size	B	A	L	Max pressure
MPC-HC19	75	3/4"|19 mm.	32,4	91	17 bar
MPC-HC25	100	1"|25 mm.	37,2	105	17 bar
MPC-HC32	125	1.1/4"|32 mm.	46	112	17 bar
MPC-HC38	150	1.1/2"|38 mm.	53,9	118	17 bar
MPC-HC50	200	2"|50 mm.	63,7	135	17 Bar
MPC-HC64	250	2.1/2"|64 mm.	76,4	147	10 bar
MPC-HC75	300	3"|75 mm.	92,1	162	8 bar

Male Threaded Lever Coupling Type B

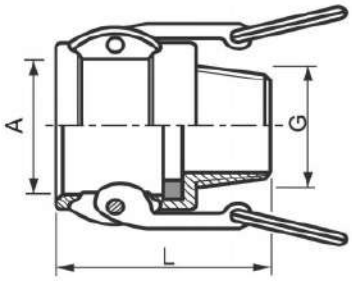

Part No.	Size	G	A	L	Max pressure
MPC-MC3/4	75	3/4"	32,4	47	17 bar
MPC-MC1	100	1"	37,2	56	17 bar
MPC-MC1-1/4	125	1.1/4"	46	64	17 bar
MPC-MC1-1/2	150	1.1/2"	53,9	66	17 bar
MPC-MC2	200	2"	63,7	76	17 Bar
MPC-MC2-1/2	250	2.1/2"	76,4	83	10 bar
MPC-MC3	300	3"	92,1	87	8 bar

CAMLOCK COUPLINGS ALUMINIUM

Female Threaded Lever Coupling Type D

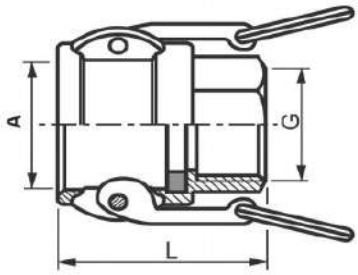

Part No.	Size	B	A	L	Max pressure
MPC-FC3/4	75	3/4"	32,4	47	17 bar
MPC-FC1	100	1"	37,2	56	17 bar
MPC-FC1-1/4	125	1.1/4"	46	64	17 bar
MPC-FC1-1/2	150	1.1/2"	53,9	67	17 bar
MPC-FC2	200	2"	63,7	76	17 Bar
MPC-FC2-1/2	250	2.1/2"	76,4	83	10 bar
MPC-FC3	300	3"	92,1	87	8 bar

Pipe Connection Lever Coupling Type D

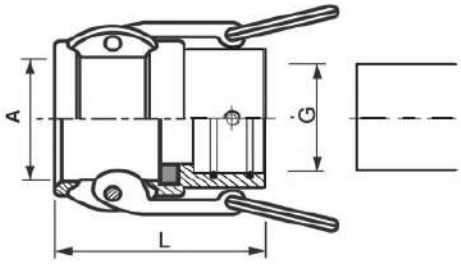

Part No.	Size	G	A	L	Max pressure
MPC-FC40	150	40	53,9	67	17 bar
MPC-FC50	200	50	63,7	76	17 Bar
MPC-FC60	250	60	76,4	83	10 bar

Dust Cap Lever Coupling Type DC

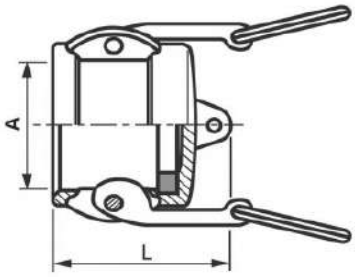

Part No.	Size	A	L	Max pressure
MPC-DC3/4	75	32,4	32	17 bar
MPC-DC1	100	37,2	40	17 bar
MPC-DC1-1/4	125	46	46	17 bar
MPC-DC1-1/2	150	53,9	48	17 bar
MPC-DC2	200	63,7	55	17 Bar
MPC-DC2-1/2	250	76,4	57	10 bar
MPC-DC3	300	92,1	59	8 bar

Gaskets for Camlock Couplers

Part No. NBR	Size	Dimension (mm)
G3/4 NBR	3/4"	35 x 22 x 5.5
G1NBR	1"	40 x 27 x 6.4
G1-1/4NBR	1-1/4"	50 x 35 x 6.4
G1-1/2NBR	1-1/2"	56 x 41 x 6.4
G2NBR	2"	67 x 51 x 6.4
G2-1/2NBR	2-1/2"	80 x 64 x 6.4
G3NBR	3"	95 x 76 x 6.4

Hosetail Plug Type E

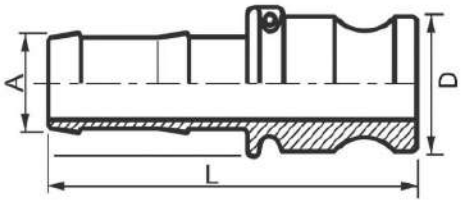

Part No.	Size	A	D	L	Max pressure
MPC-HP3/4	75	3/4"|19 mm.	32,1	86	17 bar
MPC-HP1	100	1"|25 mm.	36,7	103	17 bar
MPC-HP1-1/4	125	1.1/4"|32 mm.	45,5	107	17 bar
MPC-HP1-1/2	150	1.1/2"|38 mm.	53,4	114	17 bar
MPC-HP2	200	2"|50 mm.	63,1	131	17 Bar
MPC-HP2-1/2	250	2.1/2"|64 mm.	75,8	142	10 bar
MPC-HP3	300	3"|75 mm.	91,5	168	8 bar

Male Threaded Plug Type F

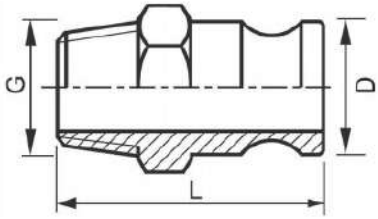

Part No.	Size	G	D	L	Max pressure
MPC-MP3/4	75	3/4"	32,1	55	17 bar
MPC-MP1	100	1"	36,7	67	17 bar
MPC-MP1-1/4	125	1.1/4"	45,5	74	17 bar
MPC-MP1-1/2	150	1.1/2"	53,4	76	17 bar
MPC-MP2	200	2"	63,1	87	17 Bar
MPC-MP2-1/2	250	2.1/2"	75,8	97	10 bar
MPC-MP3	300	3"	91,5	100	8 bar

CAMLOCK COUPLINGS ALUMINIUM

Female Threaded Plug Type A

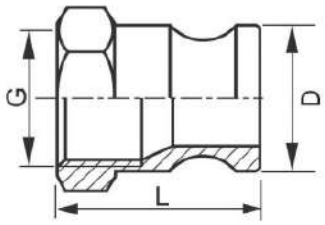

Part No.	Size	G	D	L	Max pressure
FPC-FP3/4	75	3/4"	32,1	40	17 bar
FPC-FP1	100	1"	36,7	48	17 bar
FPC-FP1-1/4	125	1.1/4"	45,5	54	17 bar
FPC-FP1-1/2	150	1.1/2"	53,4	56	17 bar
FPC-FP2	200	2"	63,1	63	17 Bar
FPC-FP2-1/2	250	2.1/2"	75,8	68	10 bar
FPC-FP3	300	3"	91,5	69	8 bar

Pipe Connection Plug Type A

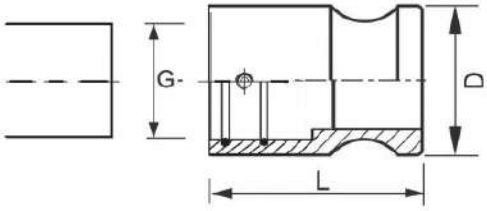

Part No.	Size	G	D	L	Max pressure
MPC-PP40	150	40	53,4	76	17 bar
MPC-PP50	200	50	63,1	87	17 Bar
MPC-PP60	250	60	75,8	97	10 bar

Dust Plug Type DP

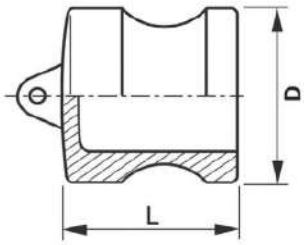

Part No.	Size	D	L	Max pressure
DPC-DP3/4	75	32,1	28	17 bar
DPC-DP1	100	36,7	35	17 bar
DPC-DP1-1/4	125	45,5	38	17 bar
DPC-DP1-1/2	150	53,4	40	17 bar
DPC-DP2	200	63,1	49	17 Bar
DPC-DP2-1/2	250	75,8	50	10 bar
DPC-DP3	300	91,5	51	8 bar

Hopper Magnets

STAINLESS STEEL

Part No.	Dia ø	Height	# Bars	Type	Strength (Gauss)	Weight(Kg)
D100	100	40	2	Standard	2500	0.9
D100-ES	100	40	2	Extra Strong	10000	0.9
D150	150	40	3	Standard	2500	1.5
D150-ES	150	40	3	Extra Strong	10000	1.5
D200	200	40	4	Standard	2500	2.5
D200-ES	200	40	4	Extra Strong	10000	2.5
D250	250	40	5	Standard	2500	3.7
D250-ES	250	40	5	Extra Strong	10000	3.7
D300	300	40	6	Standard	2500	5.5
D300-ES	300	40	6	Extra Strong	10000	5.5

Materials:
Standard: Samarium - Cobalt
Extra Strong: Neodymium Iron-Boron
Stainless Steel encased

Place direct in the Hopper to separate metal from polymers and avoid damage of nozzle and hotrunners etc.

Material Scoop

Part No.	Size
2885	2,0 ltr

2,0 ltr Material Scoop.
Ideal for scooping granules and tipping into material hoppers.
Colour and design may differ.

BALANCES AND MOISTURE ANALYSER

Compact Balance

Part No.	Capacity	Readability	Platform Size
MCB500	500 g	0,1 g	Ø 120 mm
MCB2000	2000 g	0,1 g	Ø 120 mm

Compact balance for weighing parts up to 2000 g.

Features:
Backlit LCD display.
Stainless steel pan.
ShockProtect™ overload three-point protection.
Can be stacked for storage.
Lock down mounting slot for Kensington™ type lock and cable.
Dual tare keys.
Lightweight and portable.
Colour coded, sealed keypad.
Modern low profile design.
Low cost and simple to use.
External calibration.
Auto sleep / power down function to save battery life.
Auto power off.
Low battery indication.
AC Adaptor.

Applications:
Weighing.
Percentage weighing.
Parts counting.
Below balance weighing.
Weight accumulation.

Precision Balance

Part No.	Capacity	Readability	Platform Size
MPB410	410 g	0,001 g	Ø 120 mm

Precision Balance for weighing parts with very accurate tolerance.

Features:
Backlit LCD display.
Colour coded keys.
Level indicator with adjustable levelling feet.
Removable draft shield supplied.
Robust metal housing.
Sealed keypad.
External calibration.
Pan lifter to easily.
remove samples.

Applications:
Weighing.
Net / Total.
Check weighing.
Percentage weighing.
Weight accumulation.
Parts counting.
Animal / dynamic weighing.
Density determinatio.
Below balance weighing.

Moisture Analyser

Part No.	Capacity	Readability	Platform Size
MMB65	65 g	0,001 g	Ø 100 mm

The MMB Moisture Analyser makes moisture analysis of plastic granules easy for fast and accurate results.
The moisture analyzer comprises of a balance and an integrated heater.
The analyser will first weigh the material sample in a foil tray at the start of the process; it will then heat the sample up, removing the moisture, and continue heating sample until it stops losing weight. This data is then used to calculate the moisture content based on the moisture loss rate, known as a drying curve.

Features:
USB port for memory card and USB I/O interface.
RS-232 interface.
Built-in memories for storing products and settings.
3 settings for heating sample, ramp up, step and standard.
Automatic test start setting for when the lid is closed.
Pan lifter to easily remove samples.
Large backlit display with dual text prompts.

Disposable Sample Pans

Part No.	Deep (mm)	
MMB-P50	10 mm	50

Aluminum sample pans are ideal for moisture analysis testing. The disposable pans fit neatly on the MMB moisture analysers pan holder.
They are 10mm deep to keep the items being weighed in place. This pack holds 50 disposable pans.

Calibration Weights

Part No.	Weight
CALW20G	20 g
CALW50G	50 g
CALW200G	200 g
CALW1000G	1000 g

Ideal for calibrating Scales and moisture analyser.

Thermal Printer

Part No.	Power Supply	Paper Width
ATP-100	110/230 VAC - 8,5 VDC	57,5

Mouldpro's ATP thermal printer is compact and ideally suited for use with balances and scales.
Simple-to-use features combined with quick set-up makes for a truly versatile printer.

Features:
- A single positive push-button feed key and three easy-to-read LED indicators make operation simple.
- Combined with the compact design, which takes little space on the bench, this makes the ATP the right choice for any printing applications.

Spare Paper:
No. ATP-100-1 Thermal paper.
No. ATP-100-10 Thermal paper (10pk).

END OF ARM TOOLING

06.

165 QUICK CHANGE SYSTEM

173 PROFILE & CHANNEL NUTS

176 PROFILE CONNECTORS

184 CLAMPS

193 GRIPPER ARMS

199 VACUUM CUP MOUNTS

215 VACUUM CUPS

223 SPRUE GRIPPERS

238 FINGER GRIPPERS

248 GENERAL PURPOSE GRIPPERS

249 SPECIALITY GRIPPERS

254 NIPPERS

266 CYLINDERS & SLIDES

272 FITTINGS, TUBE & MANIFOLDS

279 ELECTRONICS & SENSORS

QC-RSW – Quick Changer Robot Side

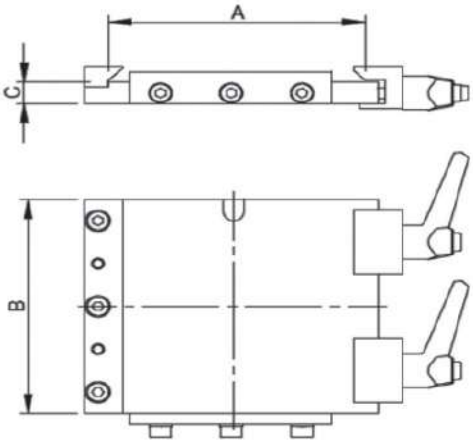

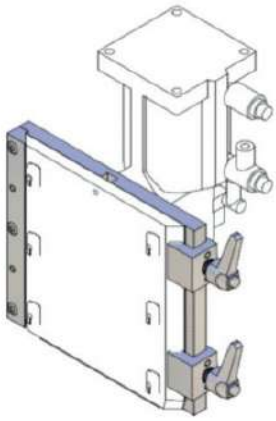

Part No.	A	B	C	Max load	Reference	Weight (g)
QC-RSW-60-00	60	60	10	5 kg	QC-SSW-60	140
QC-RSW-100-00	100	100	10	10 kg	QC-SSW-100	495
QC-RSW-160-00	160	160	10	20 kg	QC-SSW-160	1136
QC-RSW-250-00	250	250	10	40 kg	QC-SSW-250	3072

Manual interface between robot and EOAT.
Works with all profile systems.

QC.LAL – Pneumatic Connection for Quick Changer QC-RSW

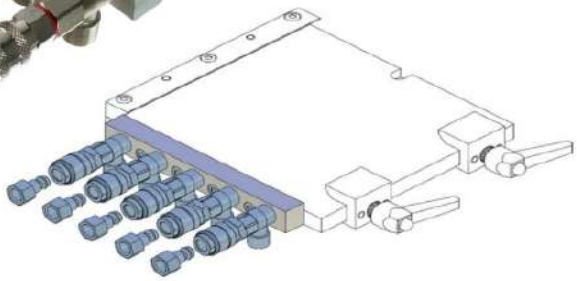

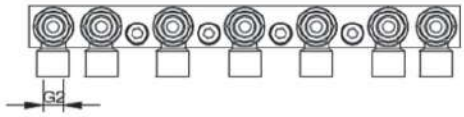

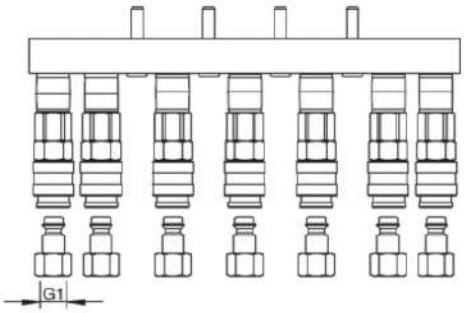

Part No.	G1	G2	No. of Connections	Reference	Weight (g)
CA.LAL.1.5	M5	M5	5	QC-RSW-100	154
CA.LAL.1.7	M5	M5	7	QC-RSW-100	225
CA.LAL.2.5	G 1/8	G1/8	5	QC-RSW-160	629
CA.LAL.2.7	G 1/8	G 1/8	7	QC-RSW-160	742
CA.LAL.3.6	G 1/4	G 1/4	6	QC-RSW-250	902
CA.LAL.3.8	G 1/4	G 1/4	8	QC-RSW-250	1503

Couplers are Standard "Rectus 21" series.

DOVETAIL PLATE QUICK CHANGE SYSTEM

QC-SSW – EOAT Base Plate

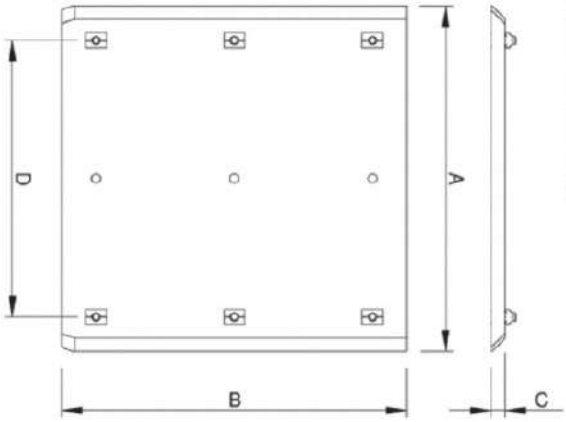

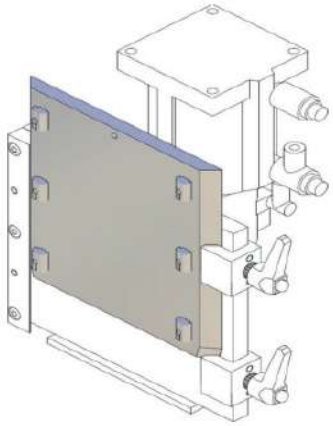

Part No.	A	B	C	D	Weight (g)
QC-SSW-60	60	60	8	35	93
QC-SSW-100	100	100	8	70	242
QC-SSW-160	160	160	10	120	695
QC-SSW-250	250	250	10	200	1641

Material: Aluminium.
Surface: Silver anodized.

QC-SSW – EOAT Base Plate

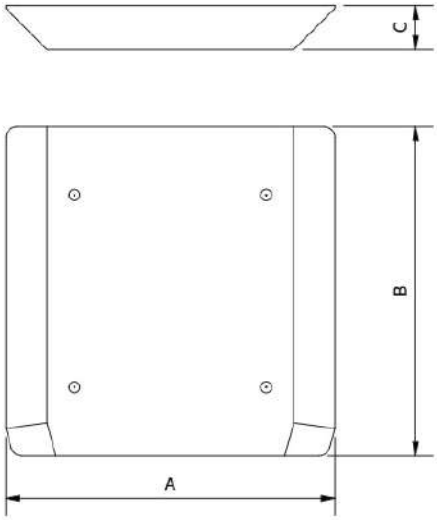

Part No.	A	B	C	Weight (g)
QC-SSW-060-CP	60	60	8	69
QC-SSW-100-CP	100	100	8	201
QC-SSW-160-CP	160	160	10	653
QC-SSW-250-CP	250	250	10	1613

Material: Aluminium.
Surface: Silver anodized.

QC.SWS – EOAT Base Plate Spring Loaded

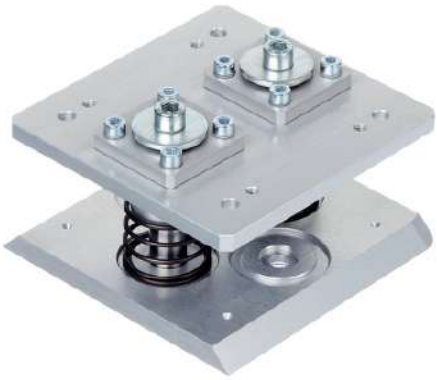

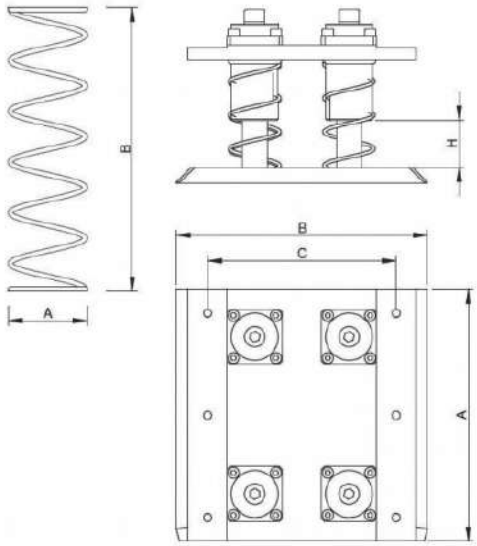

Part No.	A	B	C	H	F(N)	Guides	Weight (g)
QC-SWS-100	100	100	70	22	36	2	486
QC-SWS-160	160	160	120	30	50	4	1344

Compensates for variation in ejection stroke of IMM.

QC-SWR – EOAT Base Plate Reducer

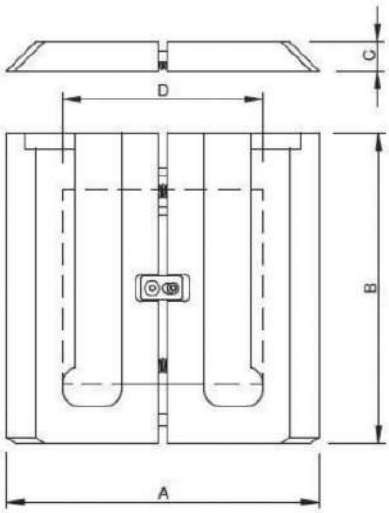

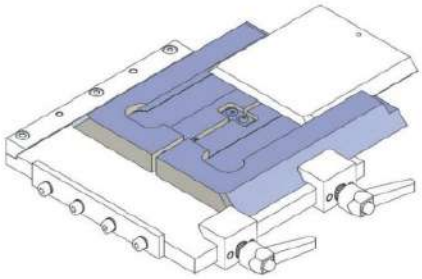

Part No.	A	B	C	D	REF 1	REF 2	Weight (g)
QC-SWR-100	100	100	15	60	QC-SSW-60	QC-RSW-100-00	263
QC-SWR-160	160	160	15	100	QC-SSW-100	QC-RSW-160-00	703
QC-SWR-250	250	250	20	160	QC-SSW-160	QC-RSW-250-00	2441

Allows mounting of EOAT's with smaller dovetail plates to a larger robot side plate.

DOVETAIL PLATE QUICK CHANGE SYSTEM

QC-SWH – EOAT Wall Mount

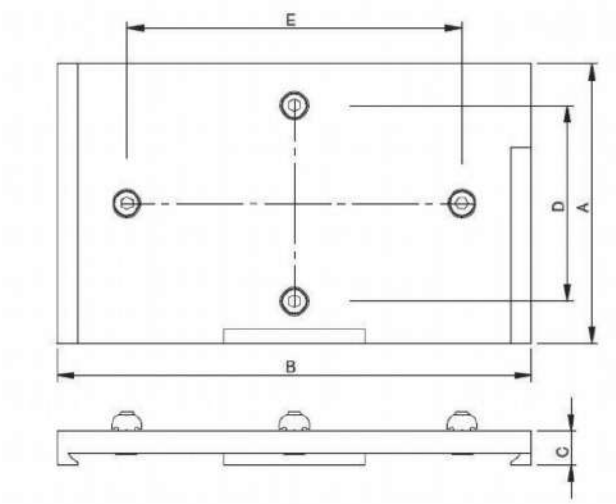

Part No.	A	B	C	D	E	REF	Weight (g)
QC-SWH-060	60	70	10	35	30	QC-SSW-60	128
QC-SWH-100	60	110	10	35	70	QC-SSW-100	182
QC-SWH-160	100	170	12	70	120	QC-SSW-160	412
QC-SWH-250	120	270	15	90	220	QC-SSW-250	1033

For wall mounted storage of EOAT's.

MRS – Quick Changer Robot Side

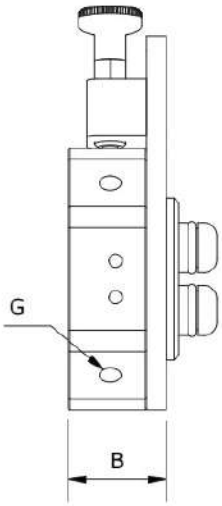

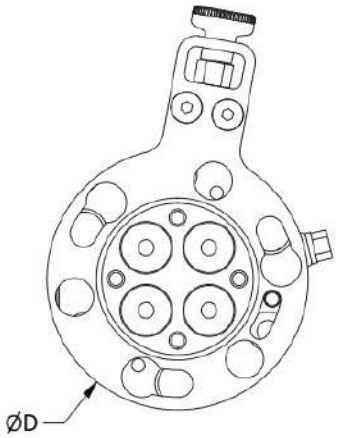

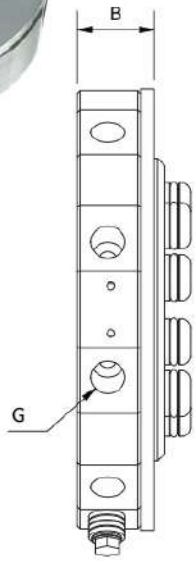

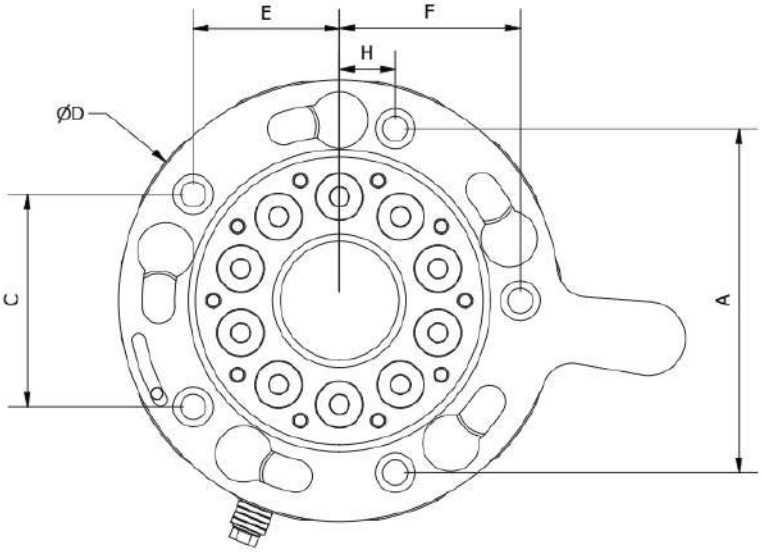

Part No.	D	A	C	E	F	H	G	B	Weight (g)
MRS-50	50	-	-	-	-	-	M5 (4x)	18,68	108
MRS-90	90	-	53,6	22,5	35	-	G1/8 (8x)	18,3	318
MRS-150	150	116,03	71,7	49,35	61	18,85	G1/4 (10x)	25,95	1158
MRS-160	160	116,03	71,7	49,35	61	18,85	G1/8 (12X)	25,95	1213
MRS-200	200	175	87,5	75,8	75,8	25	G1/4(12X)	30,6	2409

Quick changer for easy placement and correct alignment of EOAT on the robot.
Avoids mistakes in pneumatic/elecrical connections.
Available with 4, 8, 10 or 12 pneumatic ports.

ROUND QUICK CHANGER SYSTEM

MGS – Quick Changer Gripper Side

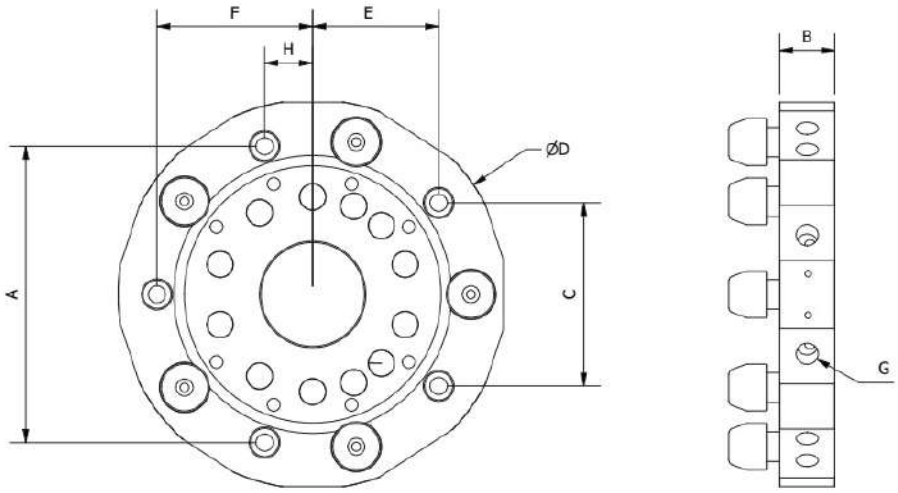

Part No.	D	A	C	E	F	H	G	B	Weight (g)
MGS-50	50	-	-	-	-	-	M5 (4x)	15,3	63
MGS-90	90	-	-	-	-	-	G1/8 (8x)	15,9	227
MGS-150	150	114,13	70,53	48,54	60	18,54	G1/4 (10x)	21,2	827
MGS-160	160	114,13	70,53	48,54	60	18,54	G1/8 (12X)	21,2	900
MGS-200	200	175	87,5	75,8	75,8	25	G1/4(12X)	25	1798

Quick changer for easy placement and correct alignment of EOAT on the robot.
Avoids mistakes in pneumatic/elecrical connections.
Available with 4, 8, 10 or 12 pneumatic ports.

MGSI – Interface for Quick Changer

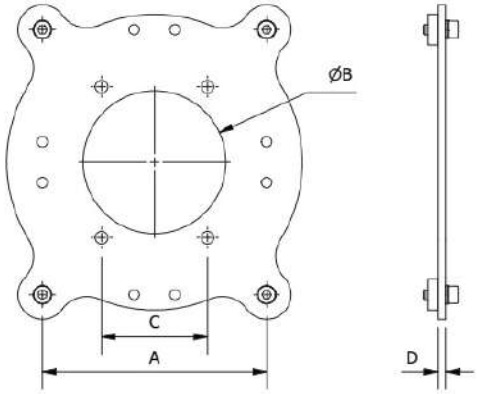

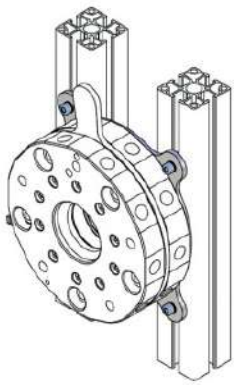

Part No.	A	B	C	D	Reference	Weight (g)
MGSI-50	25	32	15	3	MGS-50	63
MGSI-90	76	37	35	3	MGS-90	170
MGSI-150	110	70	52	4	MGS-150/MGS-160	497
MGSI-200	192	140	151,6	8	MGS-200	1439

Interface to mount EOAT quick changers to profiles.
Fastening set included.

QC.M.E – Electrical Connectors

QC.MR.ES

QC.MG.ES

QC.MR.E

QC.MG.E

Part No.	I/0 connection type	Working Current	Break down voltage	Temperature range	Contact	Max conductor cross section	Max cable outer dia	Weight (g)
QC.MR.ES	15 pin	0,5	0 ÷ 250 Vac	-55°C, +105°C	Gold plated	AWG28	7 mm	50
QC.MG.ES	15 pin	0,5	0 ÷ 250 Vac	-55°C, +105°C	Gold plated	AWG28	7 mm	50
QC.MR.E	15 pin	3A	0 ÷ 250 Vac	-55°C, +105°C	Gold plated	AWG28	7 mm	50
QC.MG.E	15 pin	3A	0 ÷ 250 Vac	-55°C, +105°C	Gold plated	AWG28	7 mm	50

Springs assist in maintaining connections.
Spring contact design, minimises potential contact damage.
Self-aligning.

QC.MB – Electrical Connector Spacer

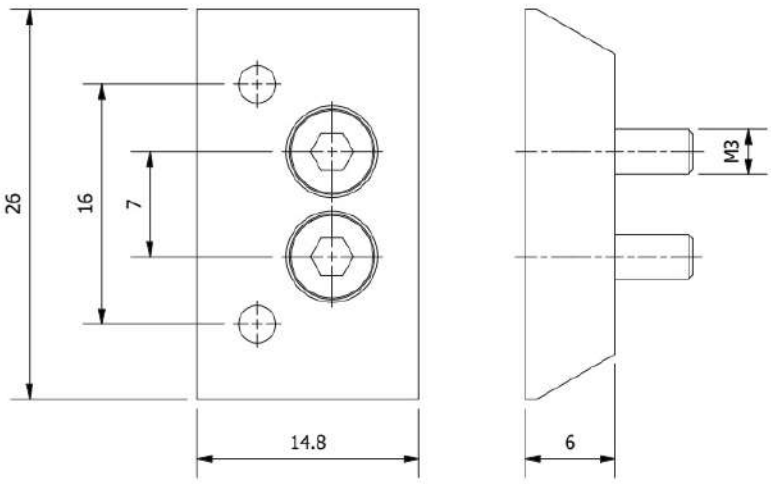

Part No.	Weight (g)
QC.MB.S	6

For wall mounted storage of EOAT's.

MGSH – Wall Mount for Quick Changer

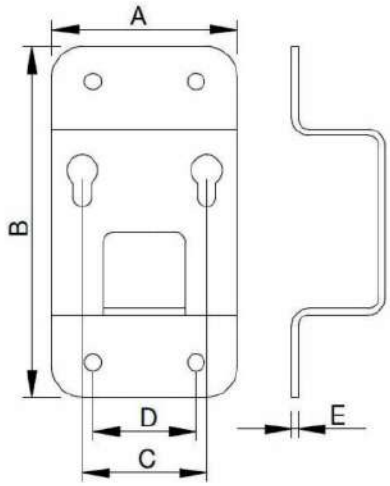

Part No.	A	REF	Weight (g)
MGSH-050	50	MGS-50	125
MGSH-090	90	MGS-90	440
MGSH-150	150	MGS-150/160	926
MGSH-200	200	MGS-200	1178

Included mounting screws.

APX – Aluminum Profile

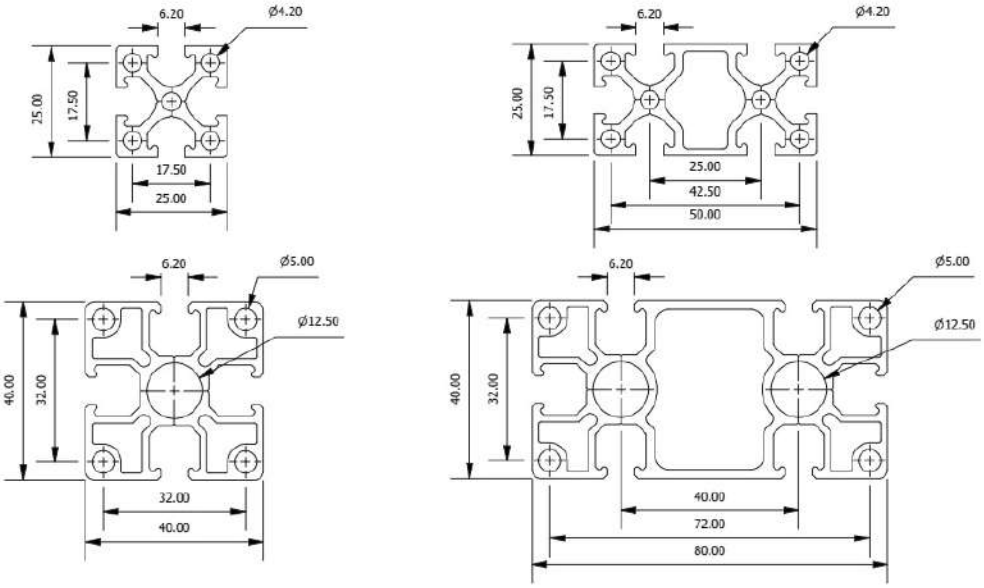

Part No.	Length	REF	Weight (g)
APX.2525.1000	1m	MPP-25-25	683
APX.2525.2000	2m	MPP-25-25	1365
APX.2550.1000	1m	MPP-25-50	1155
APX.2550.2000	2m	MPP-25-50	2311
APJ.4040.1000	1m	MPP-40-40	1407
APJ.4040.2000	2m	MPP-40-40	2814
APJ.4080.1000	1m	MPP-40-80	2302
APJ.4080.2000	2m	MPP-40-80	4603

Material: Aluminium.
Surface: Silver anodized.

MPP – Profile End Cap

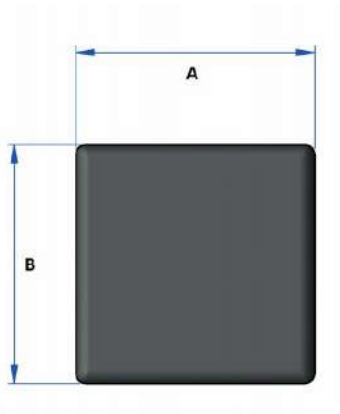

Part No.	A	B
MPP-25-25	25	25
MPP-25-50	25	50
MPP-40-40	40	40
MPP-40-80	40	80

Provides a finished look to an EOAT.
Reduces the risk of injury by coverage of sharp edges.

CTK – Cable Tie

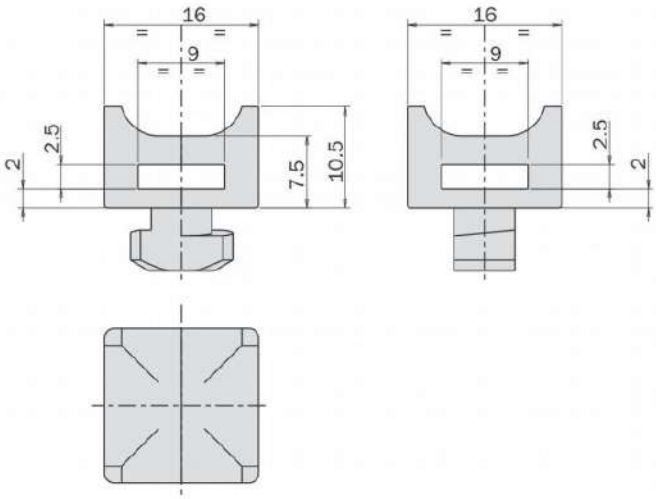

Part No.	Weight (g)
CTK.01X	20g

Twist on cable saddle for clean pneumatic/electrical cable management.

CN – Channel Nut for Profiles

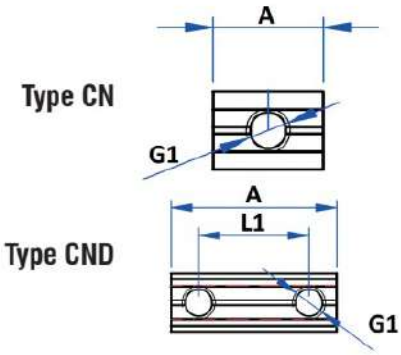

Part No.	G1	A	L1	Weight (g)
CN-M3	M3	15		6
CN-M4	M4	15		6
CN-M4-16	M4	24	16	9
CN-M5	M5	15		5
CN-M5-20	M5	30	20	11
CN-M6	M6	15		5
CN-M6-20	M6	30	20	11

Suitable for L, X and J line of profiles.

CN – Last Minute Channel Nut for Profiles

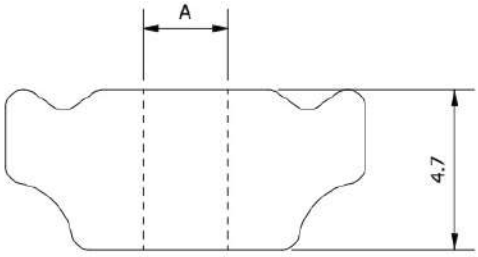

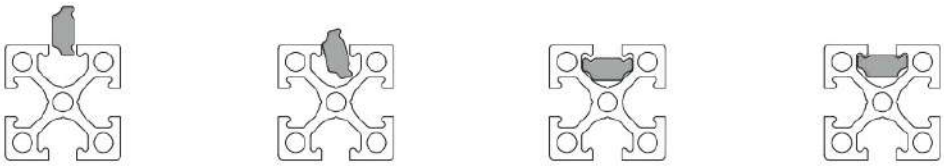

Part No.	A	Weight (g)
CN-M4-LM	M4	3
CN-M5-LM	M5	2
CN-M6-LM	M6	2

Suitable for L, X and J line of profiles.

PROFILE CORNER BRACKET

MP.WIV – Profile Corner Bracket

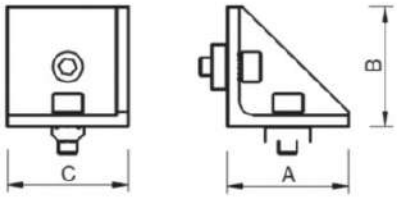

Part No.	A	B	C	REF	Weight (g)
MP.WIV.X.25.0	25	25	16	X	28
MP.WIV.X.50.25	51	51	16	X	80
MP.WIV.X.25	25	25	19	X	33
MP.WIV.X.50	50	50	19	X	82
MP.WIV.J.40	40	40	40	J	60
MP.WIV.J.80	78	78	37	J	184

Reinforcement of profile joints.

CC – Profile Cross Joint Connector

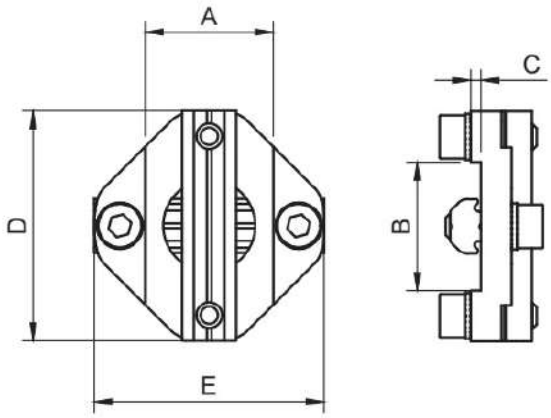

Part No.	A	B	C	D	E	REF	Weight (g)
CC25-25-X	25	25	4	45	45	X	70
CC50-25-X	50	25	4	45	70	X	110
CC50-50-X	50	50	4	70	70	X	175
CC40-25-J	40	25	4	45	60	X/J	110
CC40-40-J	40	40	4	60	60	J	110
CC80-40-J	80	40	4	60	100	J	190
CC80-80-J	80	80	4	100	100	J	268

Exact 90° connection of two profiles.
Highly rigid, connection.
Allows adjustment of both profiles.

CCB – Square Joint Connector Bridge

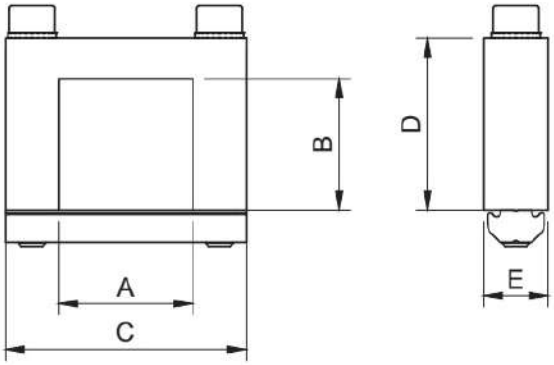

Part No.	A	B	C	D	E	REF	Weight (g)
CCB25-25-X	25	25	45	30	15	X	40
CCB25-50-X	25	50	70	30	15	X	54
CCB50-25-X	50	25	45	55	15	X	57
CCB40-40-J	40	40	60	48,5	15	J	72
CCB80-40-J	80	40	100	50	15	J	107

For 90° connection of two profiles.
Allows adjustment of both profiles.

EP. – Profile End Plate

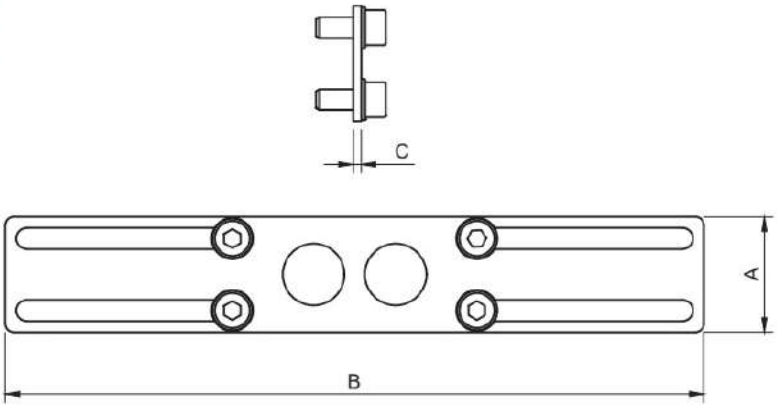

Part No.	A	B	C	Reference	Weight (g)
EP.25.170	25	170	2	APX25-25..	48
EP.25.220	25	220	2	APX25-25..	60
EP.25.270	25	270	2	APX25-25..	69
EP.25.320	25	320	2	APX25-25..	85
EP.50.25.170	50	170	2	APX25-50..	100
EP.50.25.220	50	220	2	APX25-50..	130
EP.50.25.270	50	270	2	APX25-50..	162
EP.50.25.320	50	320	2	APX25-50..	192

End plate connection for added rigidity of framwork.

PE. – Profile End Connector

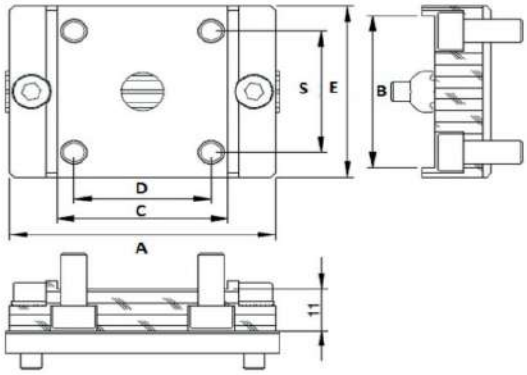

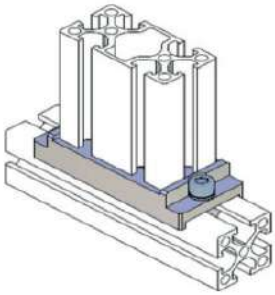

Part No.	A	B	C	D	S	E	REF	Weight (g)
PE.25.25	50	25	25	17,5	17,5	30	APX.2525	69
PE.25.50	70	25	50	42,5	17,5	30	APX.2550	87
PED.25.50	55	50	-	14,5	17,5	25	APX.2525/APX.2550	69
PED.50.50	75	55	-	42,5	17,5	25	APX.2550/APX.2550	87
PE.40.40	62	40	40	32	32	45	APX.4040	128

Strong 90° connection of two profiles.
End connected profile, adjustable along length of other profile.
End of profile needs to be tapped.

S, L, T FLAT CONNECTORS

MA.VBG. – Profile Connector Straight

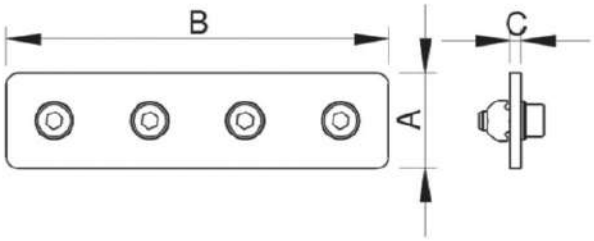

Part No.	A	B	C	REF	Weight (g)
MA.VBG.X.25.50	25	50	3	X	47
MA.VBG.X.50.50	50	50	3	X	94
MA.VBG.X.25.100	25	100	3	X	99
MA.VBG.J.40.80	40	80	3	J	97
MA.VBG.J.40.160	40	10	3	J	215

Material: Steel

MA.VBL. – Profile Connector L-Style

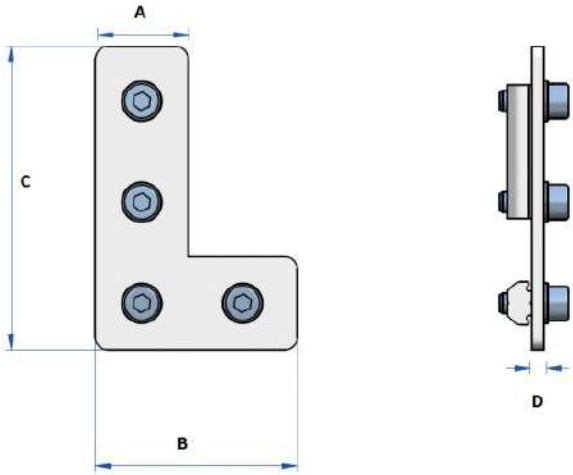

Part No.	A	B	C	D	REF	Weight (g)
MA.VBL.50.50	23	50	50	3	X	71
MA.VBL.50.75	23	50	75	3	X	96
MA.VBL.80.80	40	80	80	3	J	147
MA.VBL.80.120	40	80	120	3	J	200

Material: Steel

MA.VBT. – Profile Connector T-Style

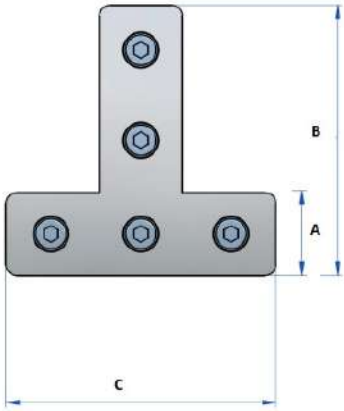

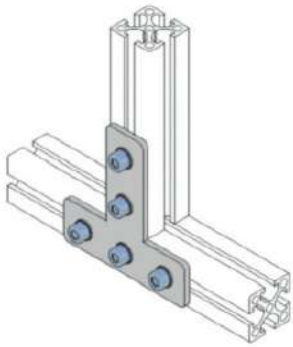

Part No.	A	B	C	D	REF	Weight (g)
MA.VBT.50.75	25	75	75	3	X	123
MA.VBT.75.100	25	75	100	3	X	149
MA.VBT.120.80	40	120	80	3	J	264

Material: Steel.

MP.EVB. – Corner Joint Plate

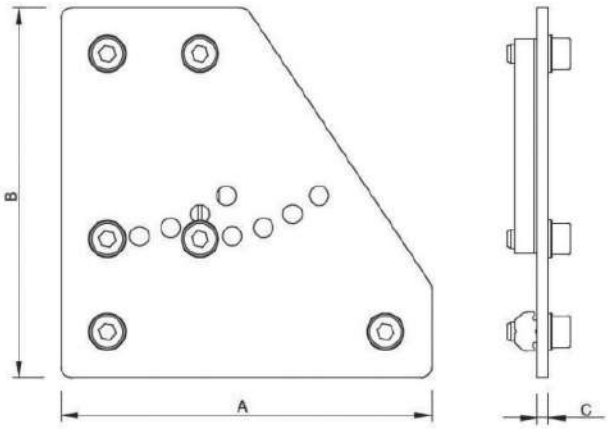

Part No.	A	B	C	REF	Weight (g)
MP.EVB.100.X	100	100	3	X	292
MP.EVB.100.J	80	100	3	J	206

Material: Steel.

MP.VBW. – Adjustable Profile Connector 0-90°

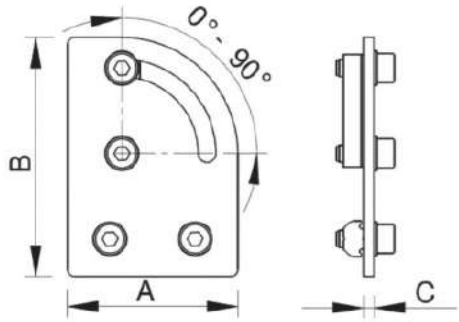

Part No.	A	B	C	REF	Weight (g)
MP.EVB.100.X	100	100	3	X	112
MP.EVB.100.J	80	100	3	J	249

Material: Steel.

MP.VBW. – Profile Connector 45°

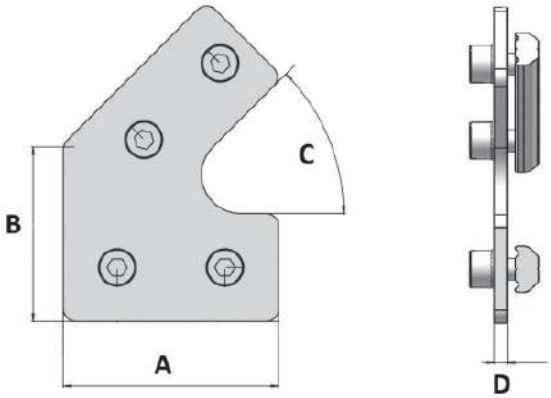

Part No.	A	B	C	D	REF	Weight (g)
MP.VBW.X.45	50	77	45°	3	X	104
MP.VBW.J.45	130	147	45°	3	J	372

Material: Steel.

CLAMPS - PROFILE TO COMPONENT

ACH. – Angle Clamp - Heavy Duty

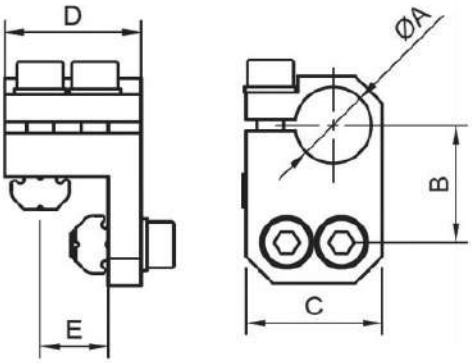

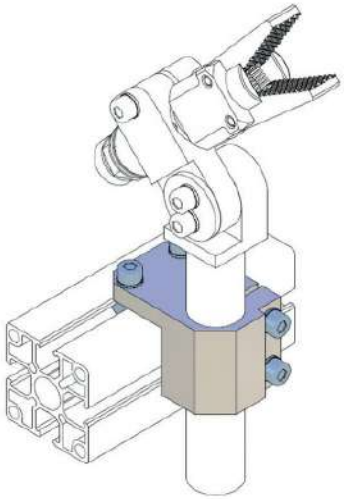

Part No.	A	B	C	D	E	Weight (g)
ACH.10.L	10	16	20	20	18	25
ACH.10.X	10	19,5	25	25	12,5	50
ACH.14.X	14	21,5	25	25	12,5	51
ACH.20.X	20	24,5	32	30	12,5	77
ACH.20.J	20	33	35	40	20	105
ACH.30.J	30	39	45	45	20	162

Heavy duty clamp.
Minimises deflection due to wrap around connection.

CCR. – Cross Connector - Round

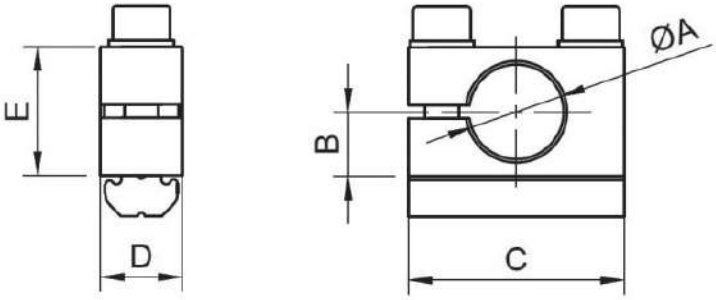

Part No.	A	B	C	D	E	Weight (g)
CCR.10.X	10	7	25	10	14	22
CCR.14.X	14	9,5	32	12	19	36
CCR.20.X	20	14	40	15	28	58
CCR.20.J	20	14	40	20	28	75
CCR.30.J	30	18	50	20	36	97

Connects tubular components to profiles at 90°.
Adjustment of componets witout lose of clamp position.

CCR.B – Cross Connector - Round With Ball Joint

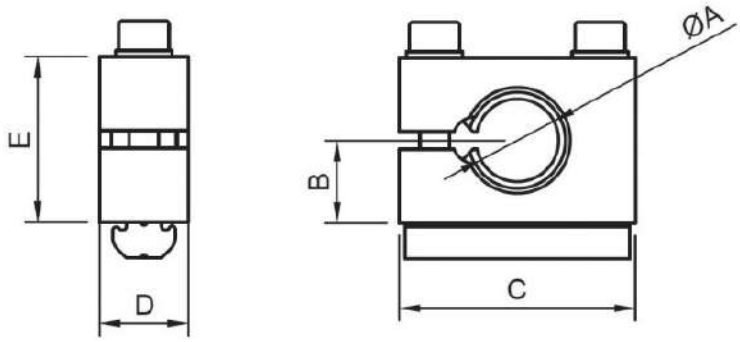

Part No.	A	B	C	D	E	Weight (g)
CCRB.10.X	10	12	35	12	24	51
CCRB.14.X	14	14	40	15	28	68
CCRB.20.X	20	18	50	20	36	135
CCRB.20.J	20	18	55	20	36	156

Flexibilty of positioning of components.
Adjustment of componets witout lose of clamp position.

ACS. – Short Angle Clamp

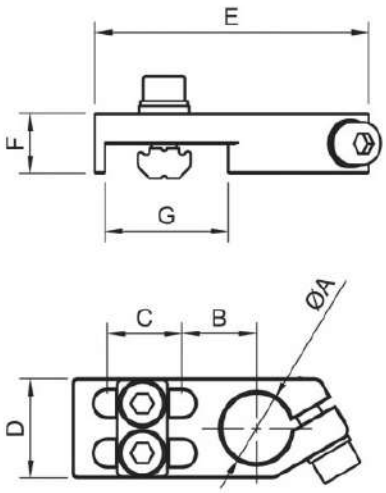

Part No.	A	B	C	D	E	F	G	Weight (g)
ACS.10.L	10	12,2	9	16	42	8	18	21
ACS.10.X	10	12,2	15	16	49	8	25	22
ACS.14.X	14	15	15	20	55	12	25	37
ACS.20.X	20	18	15	25	63	15	25	50
ACS.20.J	20	18	30	25	78	15	40	54
ACS.30.X	30	23,5	15	35	75,5	20	25	82
ACS.30.J	30	23,5	29	35	90,5	20	40	92

Material: Aluminium.
ACS clamps allow for mounting flexibility.
Kit with screws.

ACM. – Medium Angle Clamp

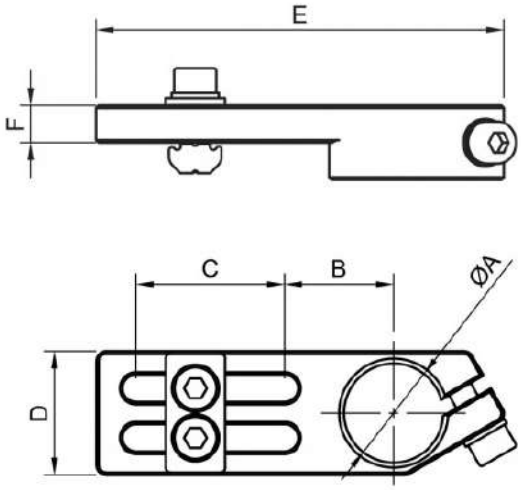

Part No.	A	B	C	D	E	F	Weight (g)
ACM.1020.L	10	16,5	20	16	56	4	23
ACM.1425.X	14	19	25	20	70	6	36
ACM.2035.X	20	22	35	25	82	7,5	55
ACM.3035.X	30	28,5	35	35	96	10	94

Material: Aluminium.
ACM clamps allow for mounting flexibility.
Kit with screws.

ACL. – Long Angle Clamp - Universal

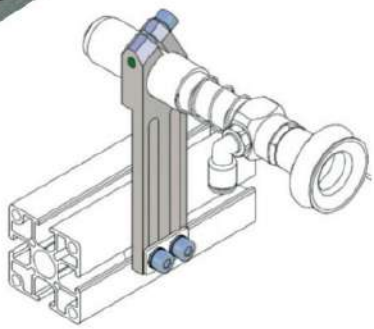

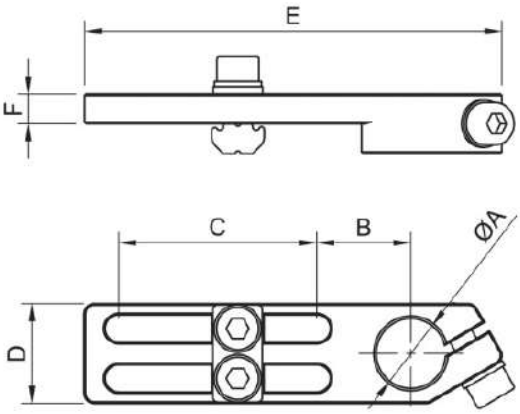

Part No.	A	B	C	D	E	F	Weight (g)
ACL.1040.L	10	16,5	40	16	76	4	24
ACL.1040.X	10	16,5	40	16	76	4	24
ACL.1440.X	14	19	40	20	85	6	39
ACL.1450.X	14	19	50	20	95	6	42
ACL.2060.X	20	22	60	25	112	7,5	62
ACL.2070.J	20	22	70	28	123	7,5	77
ACL.3060.X	30	28,5	60	35	126	10	113
ACL.3070.J	30	28,5	70	35	136	10	130

Material: Aluminium.
ACL clamps allow for mounting flexibility.
Kit with screws.

ACLH. – Long Angle Clamp - Heavy Duty

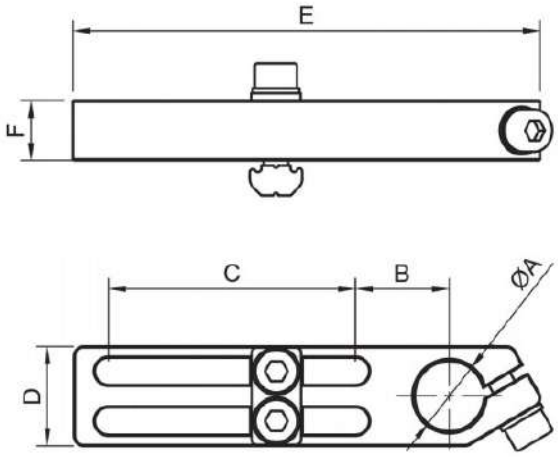

Part No.	A	B	C	D	E	F	Weight (g)
ACLH.1040.X	10	16,5	40	16	76	8	30
ACLH.1450.X	14	19	50	20	95	12	57
ACLH.2060.X	20	22	60	25	112	15	90
ACLH.2070.X	20	22	70	28	123	15	112
ACLH.3070.J	30	28,5	70	35	136	20	185

Material: Aluminium.
ACLH Heavy duty clamps allow for mounting flexibility with higher loads.
Kit with screws.

ACLB. – Long Angle Clamp With Ball Joint

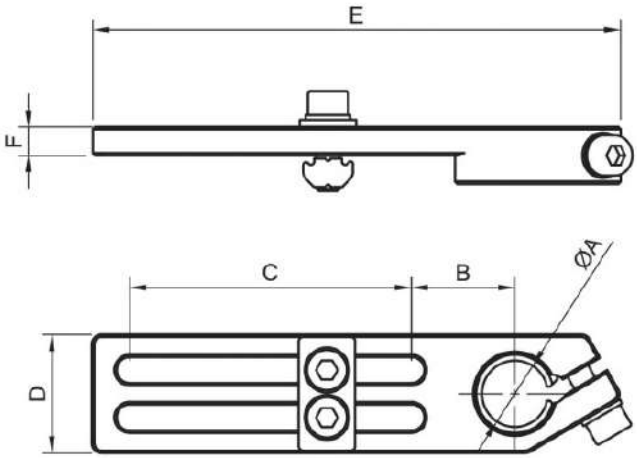

Part No.	A	B	C	D	E	F	Weight (g)
ACLB.1050.X	10	19	50	20	95	6	56
ACLB.1460.X	14	22	60	25	112	6	66
ACLB.2060.X	20	28,5	60	35	127	10	166

Material: Aluminium.
ACLB clamps feature an integrated ball joint for rotational adjustment.
Kit with screws.

ACLS. – Long Angle Clamp - Swivel Head

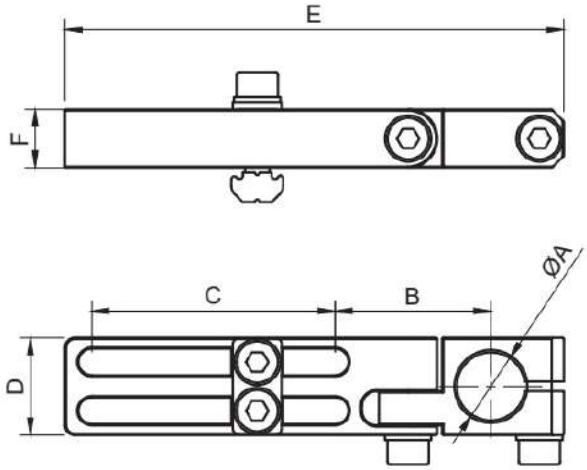

Part No.	A	B	C	D	E	F	Weight (g)
ACLS.1040.X	10	27,5	40	20	86	10	55
ACLS.1460.X	14	32	50	20	102,5	12	67
ACLS.2060.X	20	37,5	60	25	124,5	15	115
ACLS.3080.X	30	50	80	35	166,5	20	254

Material: Aluminium.
Increased flexibility in component positioning.
Heavy duty design ensures component stability.

ACLSB. – Long Angle Clamp - Swivel Head and Ball Joint

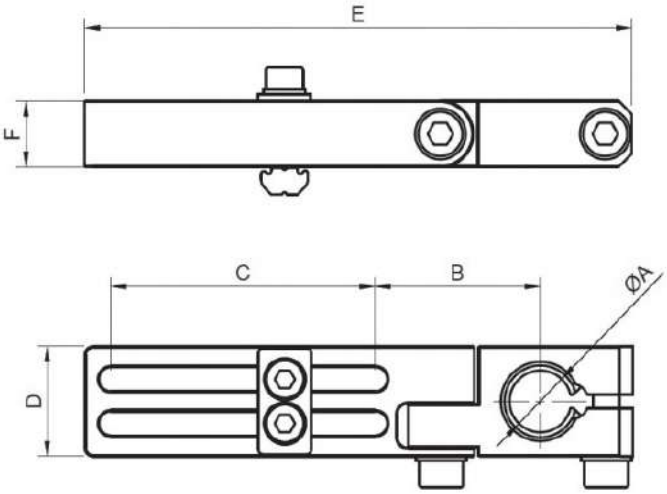

Part No.	A	B	C	D	E	F	Weight (g)
ACLSB.1050.X	10	32	50	20	102,5	12	74
ACLSB.1460.X	14	37,5	60	25	124,5	15	126
ACLSB.2080.X	20	50	80	35	166,5	20	304

Maximum flexibility in component positioning.
Heavy duty design ensures component stability.

MPW. – Clamp Extension Arm

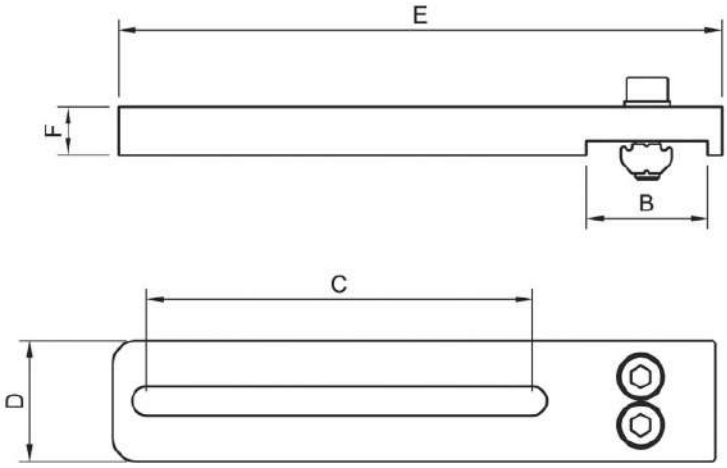

Part No.	A	B	C	D	E	F	Weight (g)
MPW.1818.X		18	80	20	118	10	62
MPW.2580.X		25	80	25	125	10	81
MPW.4080.X		40	80	25	140	10	88

Material: Aluminium
MPW extension arms allow for greater flexibility in the mounting of clamps.
Reduces the amount of hardware required, saving weight and cost.
Kit with screws

MB.04. – Mounting Bracket

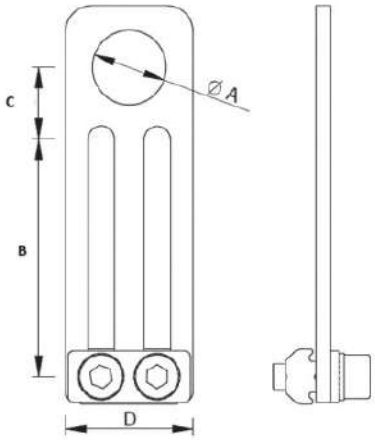

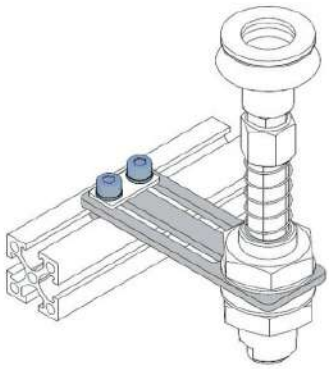

Part No.	A	B	C	D	Weight (g)
MB.04.20.10.X	10	40	11	20	35 g
MB.04.20.14.X	14	46	14	25	45 g

Material: Aluminum.
Surface: Silver anodized.

MBS. – Slotted Mounting Bracket

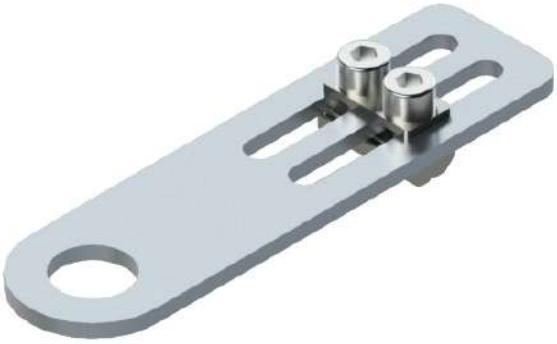

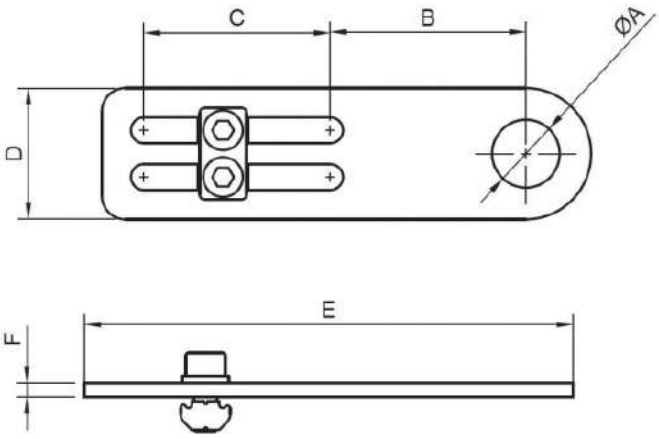

Part No.	A	B	C	D	E	F	Weight (g)
MBS.1040.X	10,5	42	40	28	105	3	69
MBS.1240.X	12,5	42	40	28	105	3	69
MBS.1440.X	14,5	42	40	28	105	3	68
MBS.1640.X	16,5	42	40	28	105	3	67
MBS.2040.X	20,5	42	40	28	105	3	65

Material: Steel.
Economy mounting of threaded suspensions.

MBT. – Threaded Mounting Bracket

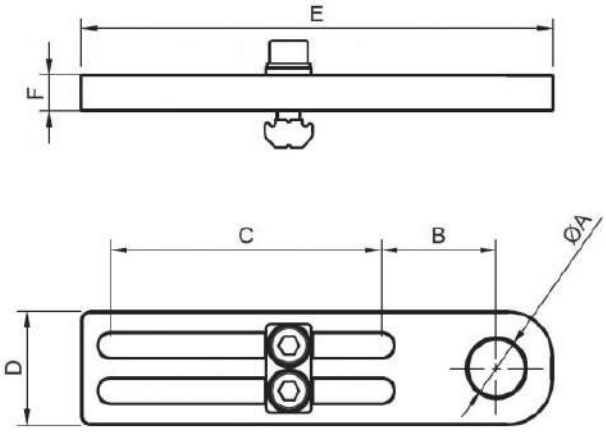

Part No.	A	B	C	D	E	F	Weight (g)
MBT.G840.X	G1/8	18,5	40	20	75	8	40
MBT.1040.X	M10x1	18,5	40	25	75	8	40
MBT.1260.X	M12x1	25,5	60	25	104,5	8	57
MBT.1460.X	M14x1.5	25,5	60	25	104,5	8	56
MBT.1660.X	M16x1	25,5	60	25	104,5	8	55
MBT.2060.X	M20x1.5	25,5	60	25	104,5	8	55
MBT.2560.X	M25x1.5	33,5	60	30	104,5	8	71
MBTS.60.X	Solid	25,5	60	25	104,5	8	59

Material: Aluminium.
Simplfied mounting of threaded suspensions.
Kit with screws.

CCT. – Cross Tube Connector

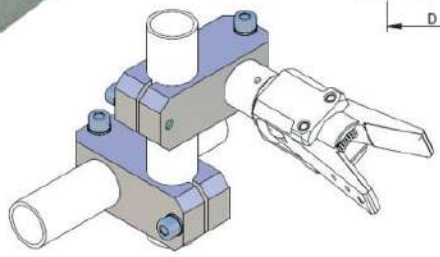

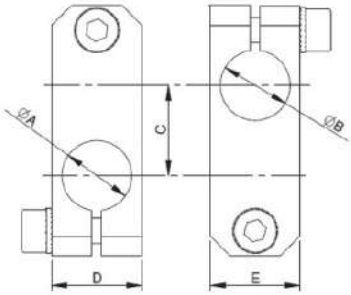

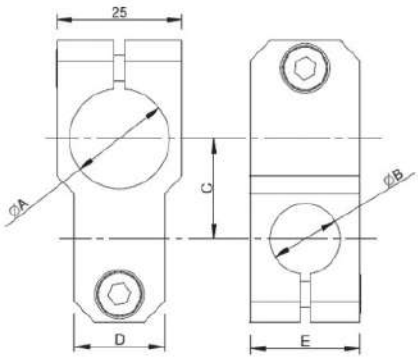

Part No.	A	B	C	D	E	Weight (g)
CCT.10.10	10	10	16	14	14	17
CCT.14.14	14	14	18	18	18	35
CCT.20.20	20	20	26	25	25	71
CCT.20.10	20	10	20	14	20	41
CCT.20.14	20	14	20	18	22	48

90° Connection of two components with one clamp.

CA. – Parallel Tube Connector

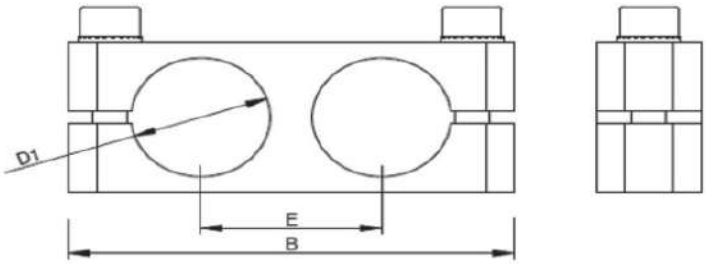

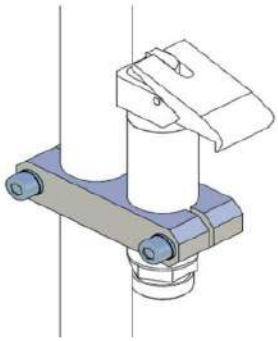

Part No.	D1	B	E	Weight (g)
CA.1010.15	10	38	15	12
CA.1414.20	14	52	20	27
CA.2020.26	20	64	26	47
CA.3030.38	30	88	38	104

Parallel connection of two components with one clamp.

CLAMPS - TUBE TO TUBE

RID. – Reducer

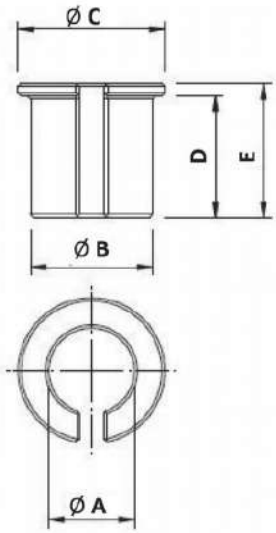

Part No.	A	B	C	D	E	Weight (g)
RID.1410	10	14	18	14	16	4
RID.2014	14	20	24	20	22	9
RID.3020	20	30	30	30	30	30

Enables the use of smaller diameter shafts in a larger clamp.

MA.GLH. – Gripper Elbow Arm Heavy Duty

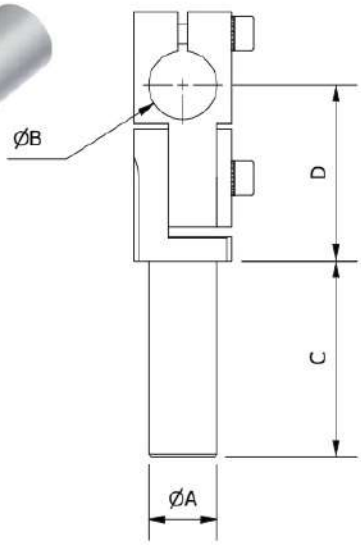

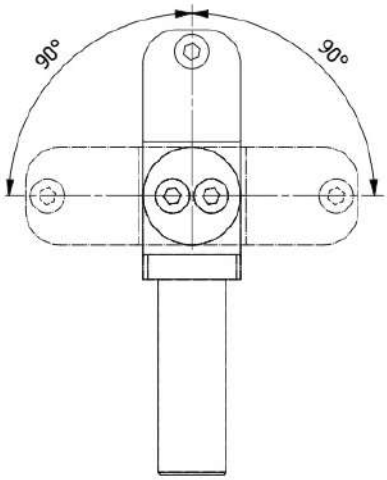

Part No.	A	B	C	D	Weight (g)
MA.GLH.1010.030	10	10	30	30	27
MA.GLH.1010.060	10	10	60	30	31
MA.GLH.1010.090	10	10	90	30	37
MA.GLH.1414.040	14	14	40	36	56
MA.GLH.1414.080	14	14	80	36	66
MA.GLH.1414.120	14	14	120	36	83
MA.GLH.2020.050	20	20	50	45,5	111
MA.GLH.2020.100	20	20	100	45,5	127
MA.GLH.2020.150	20	20	150	45,5	169
MA.GLH.3030.080	30	30	80	60	302
MA.GLH.3030.140	30	30	140	60	394
MA.GLH.3030.200	30	30	200	60	509

Secure clamping for high loads.

MA.GLA. – Gripper Elbow Arm

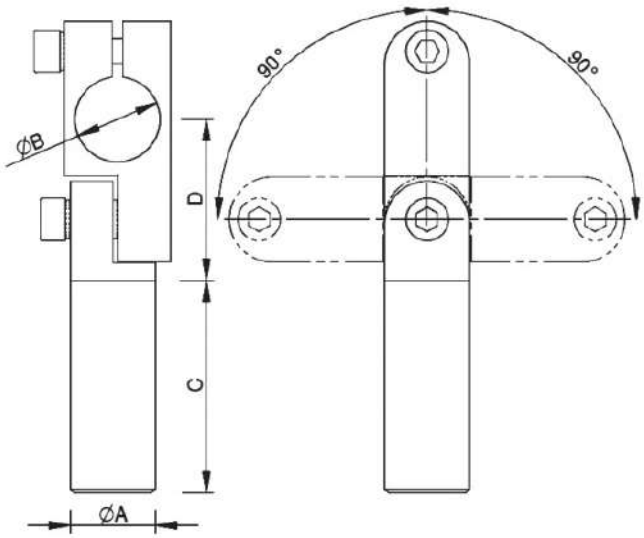

Part No.	A	B	C	D	Weight (g)
MA.GLA.1010.30	10	10	30	22	17
MA.GLA.1010.60	10	10	60	22	21
MA.GLA.1010.90	10	10	90	22	28
MA.GLA.1414.40	14	14	40	30	43
MA.GLA.1414.80	14	14	80	30	51
MA.GLA.1414.120	14	14	120	30	70
MA.GLA.2020.50	20	20	50	38	99
MA.GLA.2020.100	20	20	100	38	106
MA.GLA.2020.150	20	20	150	38	165
MA.GLA.2030.100	20	30	100	47	315
MA.GLA.3030.100	30	30	100	52,5	315

MA.WKA. – Angle Gripper Arm

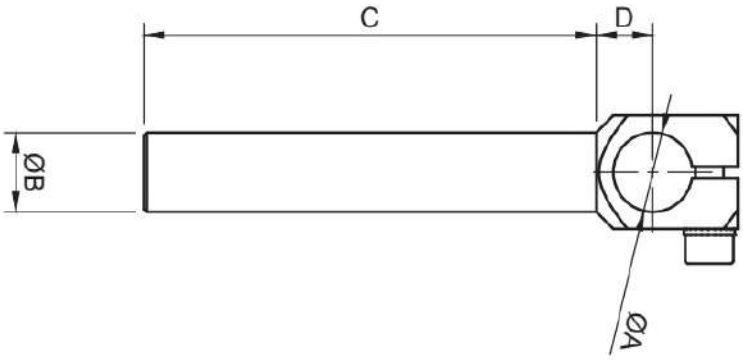

Part No.	A	B	C	D	Weight (g)
MA.WKA.1010.30	10	10	30	8	13
MA.WKA.1010.60	10	10	60	8	17
MA.WKA.1010.90	10	10	90	8	22
MA.WKA.1414.40	14	14	40	10	22
MA.WKA.1414.80	14	14	80	10	35
MA.WKA.1414.120	14	14	120	10	48
MA.WKA.2020.50	20	20	50	12	47
MA.WKA.2020.100	20	20	100	12	78
MA.WKA.2020.150	20	20	150	12	96
MA.WKA.3030.80	30	30	80	17	136
MA.WKA.3030.140	30	30	140	17	178
MA.WKA.3030.200	30	30	200	17	278

MA.ZTB. – Centering Pin

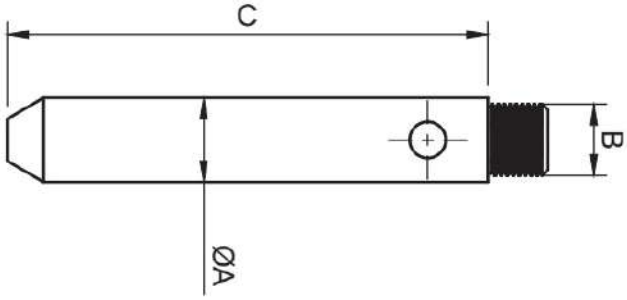

Part No.	A	B	C	REF	Weight (g)
MA.ZTB.1060	10	M8x1	60	MA.VLR.10	7
MA.ZTB.1480	14	M12x1	80	MA.VLR.14	18
MA.ZTB.20100	20	M17x1	100	MA.VLR.20	47
MA.ZTB.30100	30	M17x1	100	MA.VLR.30	104

RIGID GRIPPER ARMS

MA.VLR. – Extension Tube

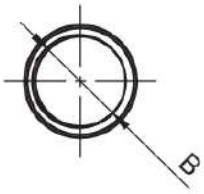

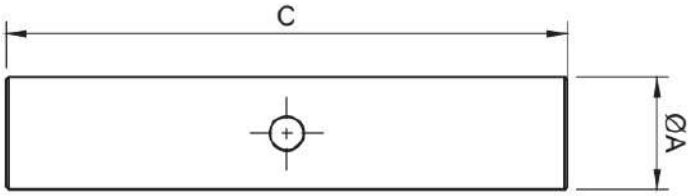

Part No.	A	B	C	Weight (g)
MA.VLR.10.30	10	M8x1	30	3
MA.VLR.10.60	10	M8x1	60	6
MA.VLR.10.90	10	M8x1	90	10
MA.VLR.14.40	14	M12x1	40	6
MA.VLR.14.80	14	M12x1	80	13
MA.VLR.14.120	14	M12x1	120	19
MA.VLR.20.050	20	M17x1	50	15
MA.VLR.20.100	20	M17x1	100	31
MA.VLR.20.150	20	M17x1	150	46
MA.VLR.30.80	30	M27x1	80	38
MA.VLR.30.140	30	M27x1	140	67

SXPC. – Gripper Suspension Smooth Body (Non-rotative) Adjustable Clamp

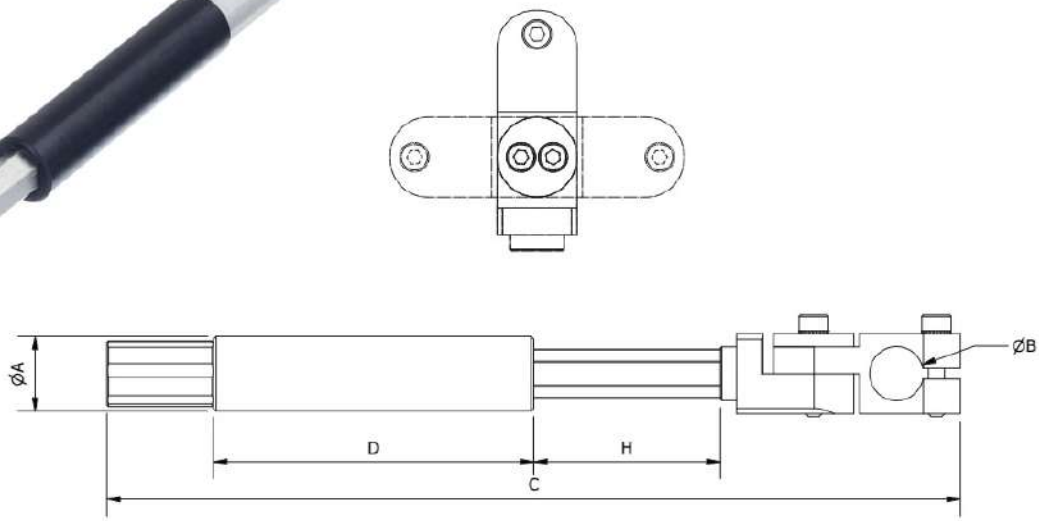

Part No.	A	B	C	D	H	F(N)	Weight (g)
SXPC.1420.10	14	10	128	42	20	8,9	43
SXPC.1435.10	14	10	160	60	35	9,5	50
SXPC.2025.14	20	14	153	55	25	11	95
SXPC.2025.20	20	20	166	55	25	11	111

Clamp angle adjustable between 0°and 90°.

SXPCT. – Gripper Suspension Threaded Body (Non-rotative) Adjustable Head

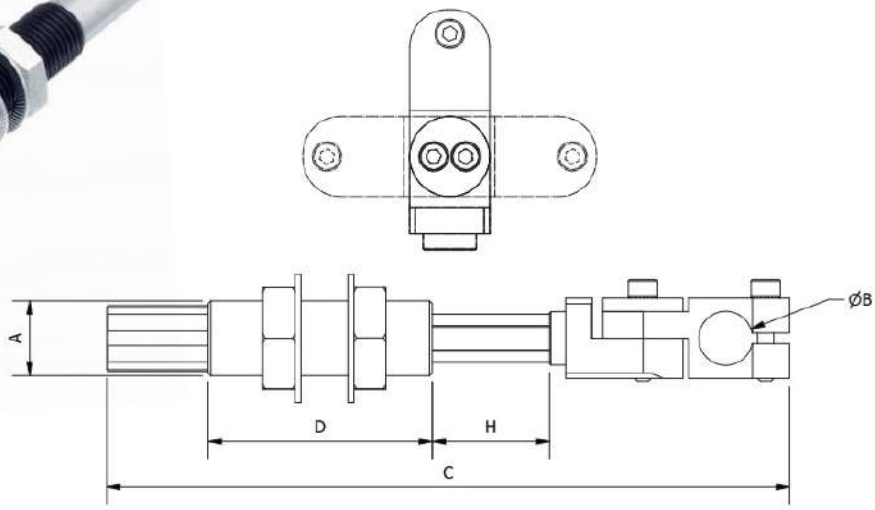

Part No.	A	B	C	D	H	F(N)	Weight (g)
SXPCT.1420.10	M14x1.5	10	128	42	20	8,9	55
SXPCT.2025.14	M20x1.5	14	153	55	25	11	130

Clamp angle adjustable between 0°and 90°.

SVPC. – Spring Loaded Elbow Arm Smooth Body (Non-rotative) Swivel Head

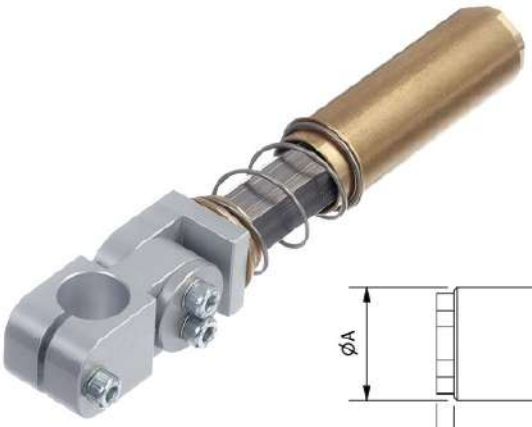

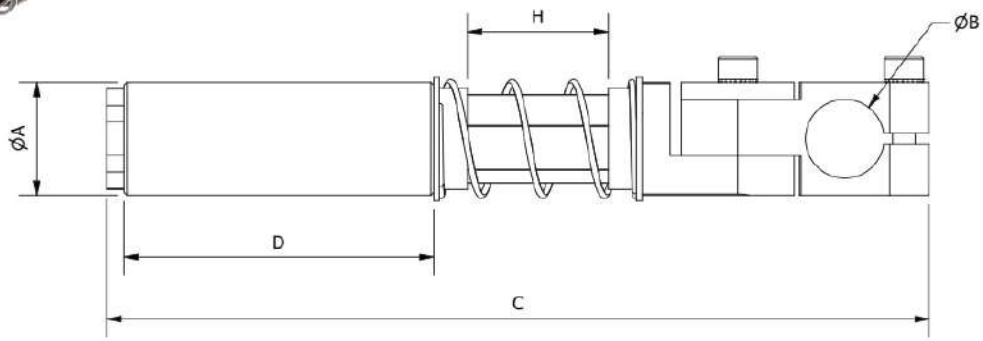

Part No.	A	B	C	D	H	Weight (g)
SVPC.1415.10	14	10	106	32	15	58
SVPC.2025.14	20	14	144	55	25	149
SVPC.2025.20	20	20	157	55	25	164

Clamp angle adjustable between 0°and 90°.

VGE. – Elbow Arm for Vacuum Cups

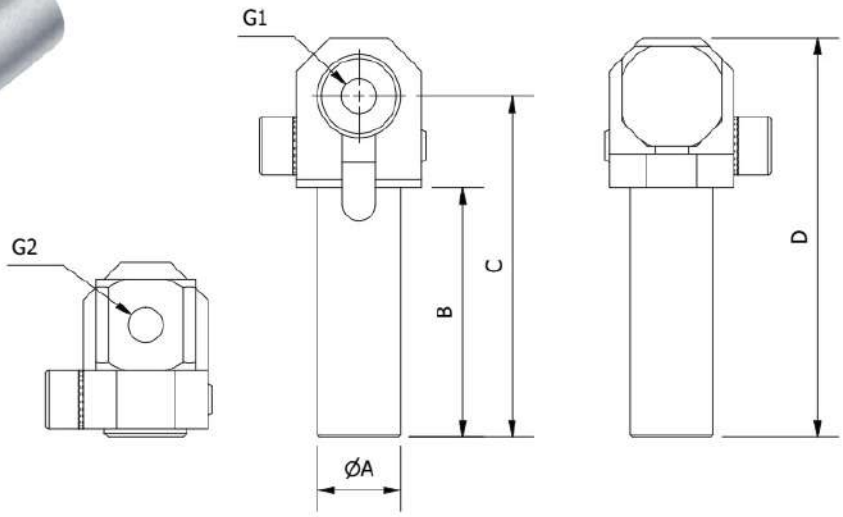

Part No.	A	B	C	D	G1	G2	Weight (g)
VGE.10030.0505	10	30	41	48	M5	M5	14
VGE.10060.0505	10	60	71	78	M5	M5	17
VGE.10090.0505	10	90	101	108	M5	M5	20
VGE.14040.1818	14	40	56	65	G1/8	G1/8	29
VGE.14080.1818	14	80	96	105	G1/8	G1/8	38
VGE.14120.1818	14	120	136	145	G1/8	G1/8	45
VGE.20050.1418	20	50	68	80	G1/8	G1/4	56
VGE.20100.1418	20	100	118	130	G1/8	G1/4	70
VGE.20150.1418	20	150	168	180	G1/8	G1/4	87
VGE.20050.1414	20	50	68	80	G1/4	G1/4	55
VGE.20100.1414	20	100	118	130	G1/4	G1/4	69
VGE.20150.1414	20	150	168	180	G1/4	G1/4	86

Allows optimal positioning of vacuum to part contour.
Angle adjustable between 0°and 90°.
Side vacuum port.

RIGID VACUUM CUP MOUNTS

VGA. – Gripper Arm for Vacuum Cups

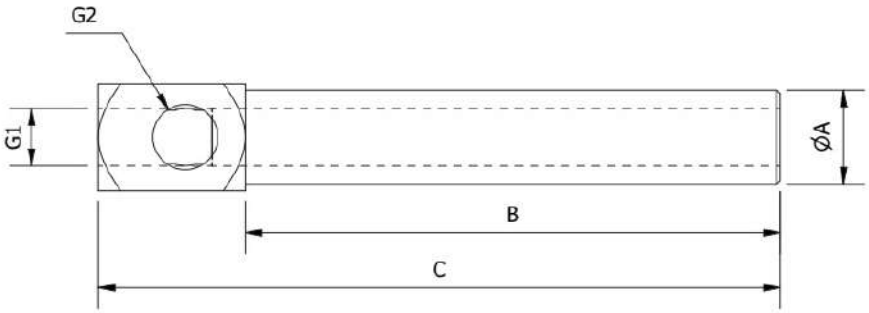

Part No.	A	B	C	G1	G2	Weight (g)
VGA.10030.0505	10	30	46	M5	M5	9
VGA.10060.0505	10	60	76	M5	M5	15
VGA.10090.0505	10	90	106	M5	M5	24
VGA.10030.1805	10	30	52	G1/8	M5	15
VGA.10060.1805	10	60	82	G1/8	M5	18
VGA.10090.1805	10	90	112	G1/8	M5	25
VGA.14040.1818	14	40	62	G1/8	G1/8	18
VGA.14080.1818	14	80	102	G1/8	G1/8	30
VGA.14120.1818	14	120	142	G1/8	G1/8	43
VGA.20050.1418	20	50	73	G1/4	G1/8	44
VGA.20100.1418	20	100	123	G1/4	G1/8	63
VGA.20150.1418	20	150	173	G1/4	G1/8	78

To optimise position of a vacuum cup.
Side vacuum port.

VTE. – Vacuum Extension Tube

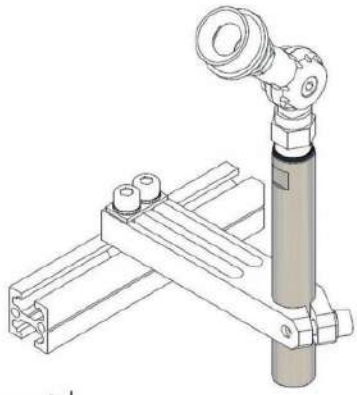

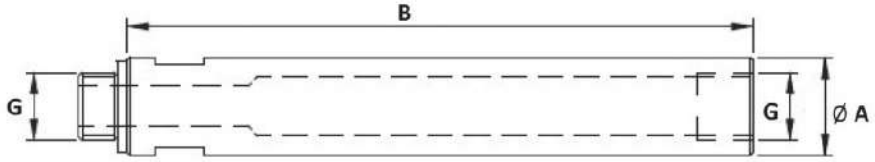

Part No.	A	B	G1	Weight (g)
VTE.1030.05	10	30	M5	6
VTE.1045.05	10	45	M5	9
VTE.1090.05	10	90	M5	16
VTE.1445.18	14	45	G1/8	14
VTE.1490.18	14	90	G1/8	26
VTE.2045.14	20	45	G1/4	30
VTE.2090.14	20	90	G1/4	58

VSE. – Vacuum Elbow - Adjustable

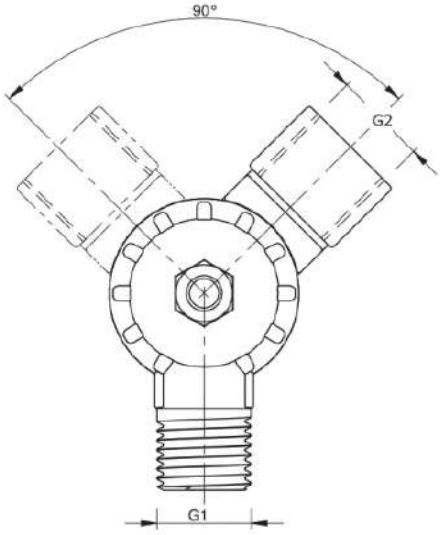

Part No.	A	G1	Weight (g)
VSE.18F18M	G1/8	G1/8	7
VSE.14F14M	G1/4	G1/4	15

For vacuum only.
Angle of vacuum cup adjustable between 0°and 90°.

VMA. – Vacuum Cup Mounting Bracket - Adjustable

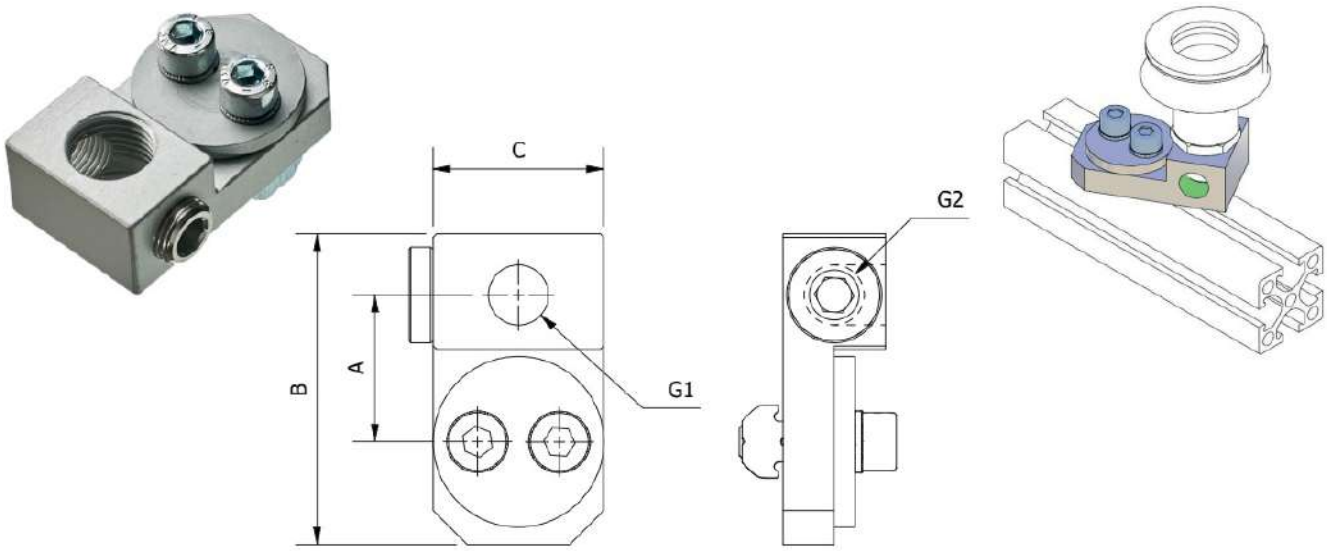

Part No.	A	B	C	G1	G2	Weight (g)
VMA.0505.L	14	28	16	M5	M5	19
VMA.1818.X	21	46	25	G1/8	G1/8	44
VMA.1418.X	21	46	25	G1/4	G1/8	44

Vacuum connection with adjustable 360° rotation.

VMF. – Vacuum Cup Mounting Bracket - Fixed

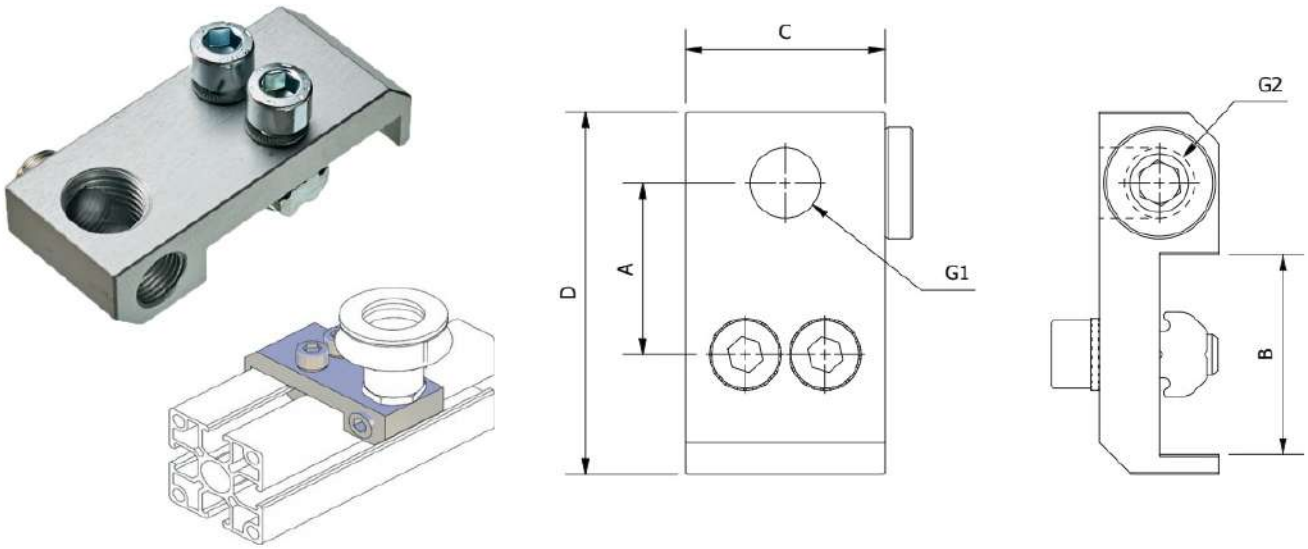

Part No.	A	B	C	D	G1	G2	Weight (g)
VMF.0505.L	17	18	16	32	M5	M5	18
VMF.1818.X	22	25	25	46	G1/8	G1/8	46
VMF.1418.X	22	25	25	46	G1/4	G1/8	49
VMF.1418.J	29	40	25	60	G1/4	G1/8	

Vacuum connection for use where space is limited.

VMB. – Vacuum Cup Mounting Bracket

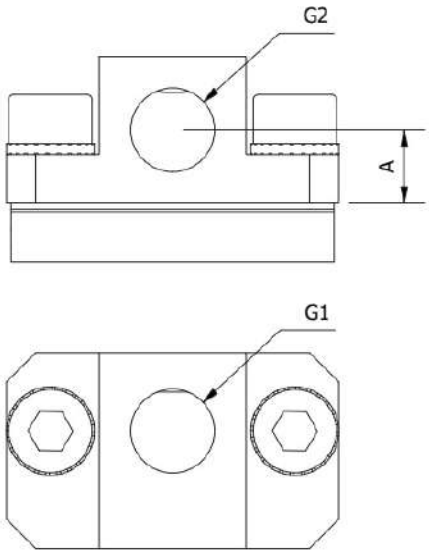

Part No.	A	G1	G2	Weight (g)
VMB.0505.X	4	M5	M5	27
VMB.1818.X	7,5	G1/8	G1/8	35
VMB.1414.X	10	G1/4	G1/4	39

Vacuum connection for use where space is limited.

VML. – Vacuum Cup Mounting Bracket - Long

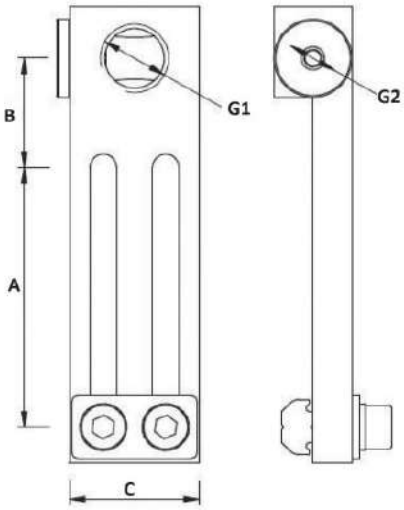

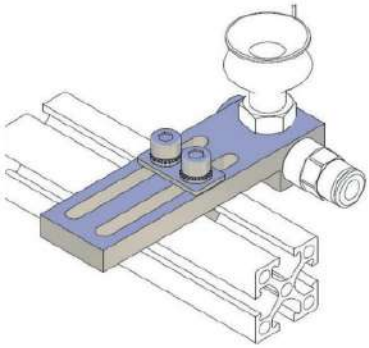

Part No.	A	B	C	G1	G2	Weight (g)
VML.0505.40.L	40	14	16	M5	M5	24
VML.1818.50.X	50	21	25	G1/8	G1/8	65
VML.1418.50.X	50	21	25	G1/4	G1/8	65
VML.1414.50.J	50	23	25	G1/4	G1/4	73

Allows inline adjustment of vacuum cup position.

VMS. – Vacuum Cup Mounting Bracket - Long, Swivel Head

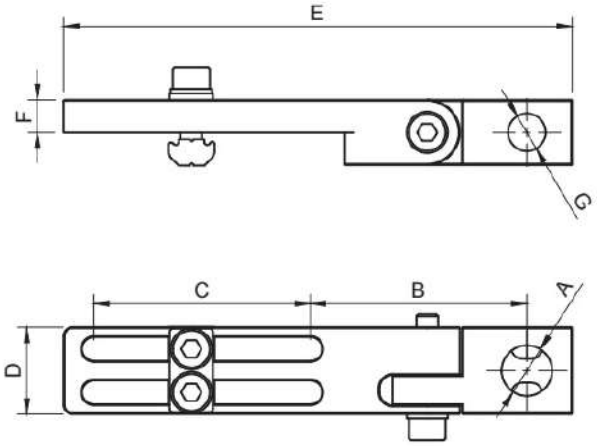

Part No.	A	B	C	D	E	F	G	Weight (g)
VMS.1418.50.X	G1 / 4	50	50	20	117.5	7.5	G 1 / 8	72

Allows inline and radial adjustment of vacuum cup position.

MP.SDR. – Telescopic Suspension Smooth Body (Rotative)

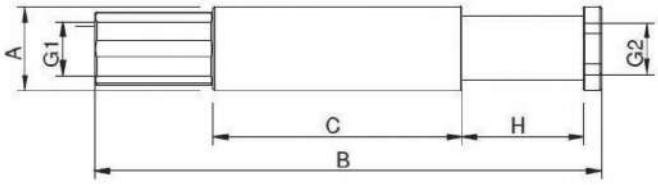

Part No.	A	B	C	G1	G2	H	F(N)	Weight (g)
MP.SDR.1010	10	51	20	M5	M5	10	3,6	7
MP.SDR.1025	10	86	40	M5	M5	25	3,7	11
MP.SDR.1420	14	85	42	G1/8	G1/8	20	8,9	19
MP.SDR.1435	14	120	62	G1/8	G1/8	35	9,5	26
MP.SDR.2025	20	97	47	G1/8	G1/8	25	11	56
MP.SDR.2050	20	147	72	G1/8	M10	50	11,4	76
MP.SDR.2025.14	20	107	47	G1/4	G1/4	25	11	54
MP.SDR.2050.14	20	157	72	G1/4	G1/4	50	11,4	74

Body and rod made of aluminium - anodized.

MP.SDRG. – Telescopic Suspension Threaded Body (Rotative)

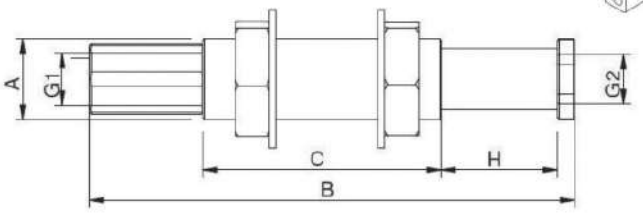

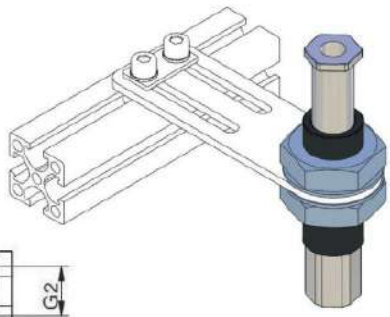

Part No.	A	B	C	G1	G2	H	F(N)	Weight (g)
MP.SDRG.1010	M10x1	51	20	M5	M5	10	3,6	12
MP.SDRG.1025	M10x1	86	40	M5	M5	25	3,7	16
MP.SDRG.1420	M14x1.5	85	42	G1/8	G1/8	20	8,9	30
MP.SDRG.1435	M14x1.5	120	62	G1/8	G1/8	35	9,5	37
MP.SDRG.1620	M16x1	85	42	G1/8	G1/8	20	8,9	37
MP.SDRG.2025	M20x1.5	97	47	G1/8	G1/8	25	11	88
MP.SDRG.2050	M20x1.5	147	72	G1/8	G1/8	50	11,4	108

Body and rod made of aluminium - anodized.

SUSPENSIONS FOR VACUUM CUPS

MP.SDN. – Telescopic Suspension Smooth Body (Non-rotative)

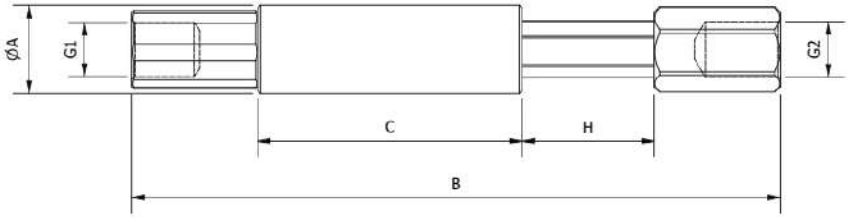

Part No.	A	B	C	G1	G2	H	F(N)	Weight (g)
MP.SDN.1010	10	61	26	M5	M5	10	3,6	8
MP.SDN.1025	10	91	41	M5	M5	25	3,7	11
MP.SDN.1420	14	103	42	G1/8	G1/8	20	8,9	25
MP.SDN.1435	14	135	60	G1/8	G1/8	35	9,5	32
MP.SDN.2025	20	114	55	G1/8	G1/8	25	11	63
MP.SDN.2050	20	167	82	G1/8	G1/8	50	11,4	81
MP.SDN.2025.14	20	114	55	G1/4	G1/4	25	11	59
MP.SDN.2050.14	20	161	82	G1/4	G1/4	50	11,4	77

Body and rod made of aluminium - anodized.
Non Rotative.

MP.SDNG. – Telescopic Suspension Threaded Body (Non-rotative)

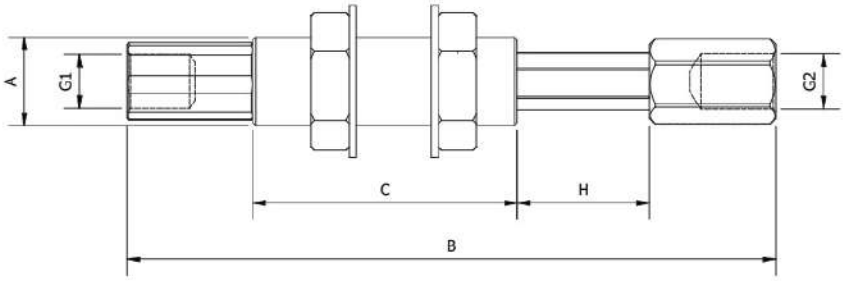

Part No.	A	B	C	G1	G2	H	F(N)	Weight (g)
MP.SDNG.1010	M10x1	61	26	M5	M5	10	3,6	13
MP.SDNG.1025	M10x1	91	41	M5	M5	25	3,7	16
MP.SDNG.1420	M14x1.5	103	42	G1/8	G1/8	20	8,9	36
MP.SDNG.1435	M14x1.5	135	60	G1/8	G1/8	35	9,5	42
MP.SDNG.2025	M20x1.5	114	55	G1/8	G1/8	25	11	96
MP.SDNG.2050	M20x1.5	174	82	G1/8	G1/8	50	11,4	115
MP.SDNG.2025.14	M20x1.5	114	55	G1/4	G1/4	25	11	92
MP.SDNG.2050.14	M20x1.5	167	82	G1/4	G1/4	50	11,4	111

Body and rod made of aluminium - anodized.
Non Rotative.

MP.SSN. – Telescopic Suspension Smooth Body (Non-rotative) Swivel Head

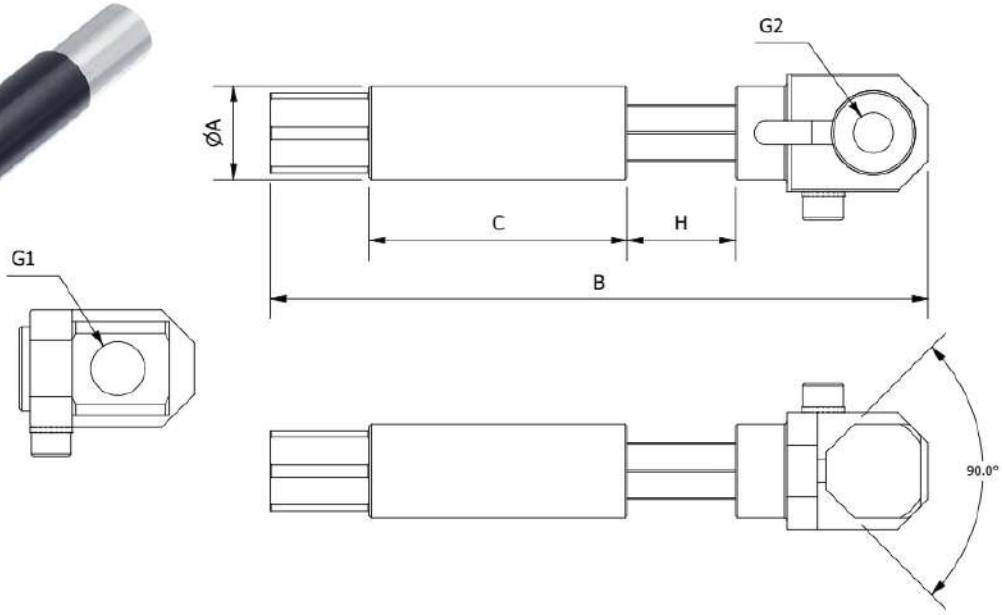

Part No.	A	B	C	G1	G2	H	F(N)	Weight (g)
MP.SSN.10100505	10	78	26	M5	M5	10	3,6	20
MP.SSN.10250505	10	108	41	M5	M5	25	3,7	23
MP.SSN.14201818	14	116	42	G1/8	G1/8	20	8,9	45
MP.SSN.14351818	14	148	60	G1/8	G1/8	35	9,5	51
MP.SSN.20251418	20	140	55	G1/4	G1/8	25	11	102
MP.SSN.20501418	20	193	82	G1/4	G1/8	50	11,4	121
MP.SSN.20251818	20	140	55	G1/8	G1/8	25	11	103
MP.SSN.20501818	20	193	82	G1/8	G1/8	50	11,4	122

Body and rod made of aluminium – anodized.
Angle of vacuum cup adjustable between 0°and 90°.
Non Rotative.

SUSPENSIONS FOR VACUUM CUPS

MP.SSNG. – Telescopic Suspension Threaded Body (Non-rotative) Swivel Head

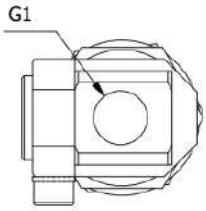

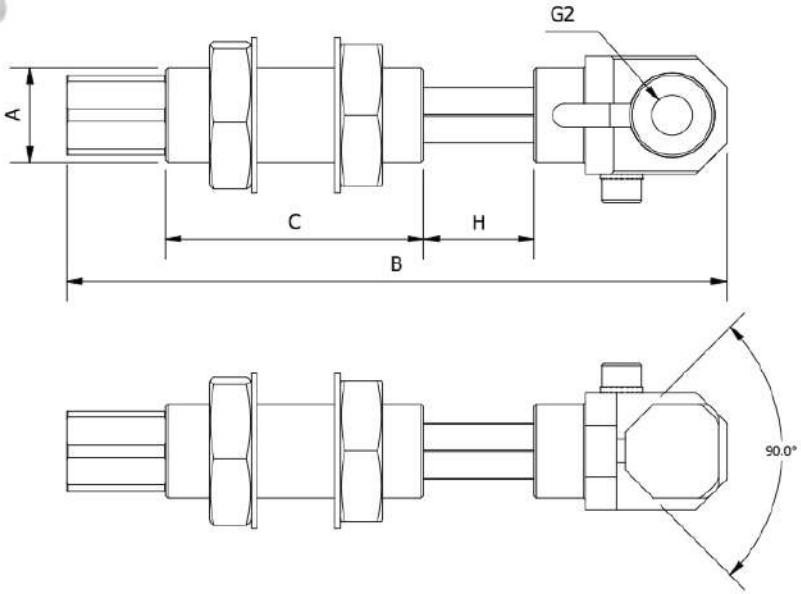

Part No.	A	B	C	G1	G2	H	F(N)	Weight (g)
MP.SSNG.10100505	M10x1	78	26	M5	M5	10	3,6	13
MP.SSNG.10250505	M10x1	108	41	M5	M5	25	3,7	16
MP.SSNG.14201818	M14x1.5	116	42	G1/8	G1/8	20	8,9	36
MP.SSNG.14351818	M14x1.5	148	60	G1/8	G1/8	35	9,5	42
MP.SSNG.20251418	M20x1.5	140	55	G1/4	G1/8	25	11	96
MP.SSNG.20501418	M20x1.5	193	82	G1/4	G1/8	50	11,4	115
MP.SSNG.20251818	M20x1.5	140	55	G1/8	G1/8	25	11	92
MP.SSNG.20501818	M20x1.5	193	82	G1/8	G1/8	50	11,4	111

Body and rod made of aluminium - anodized.
Angle of vacuum cup adjustable between 0°and 90°.
Non Rotative.

MPTSS – Telescopic Self-Retracting Suspension

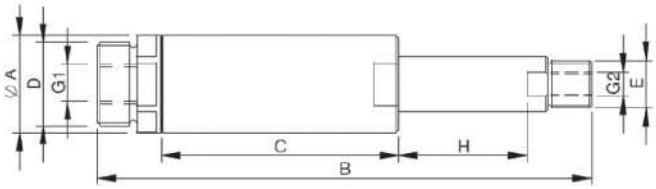

Part No.	A	B	C	D	E	G1	G2	H	F(N)	Weight (g)
MPTSS2025	20	100	48	M17x1	G1/8	G1/8	M5	25	3,6	42
MPTSS2050	20	150	73	M17x1	G1/8	G1/8	M5	50	4,2	68

Automatic retraction of vacuum cup once vacuum is established.
Reset on part release.

MA.GGD. – Spring Loaded Vacuum Cup Arm Smooth Body (Rotative)

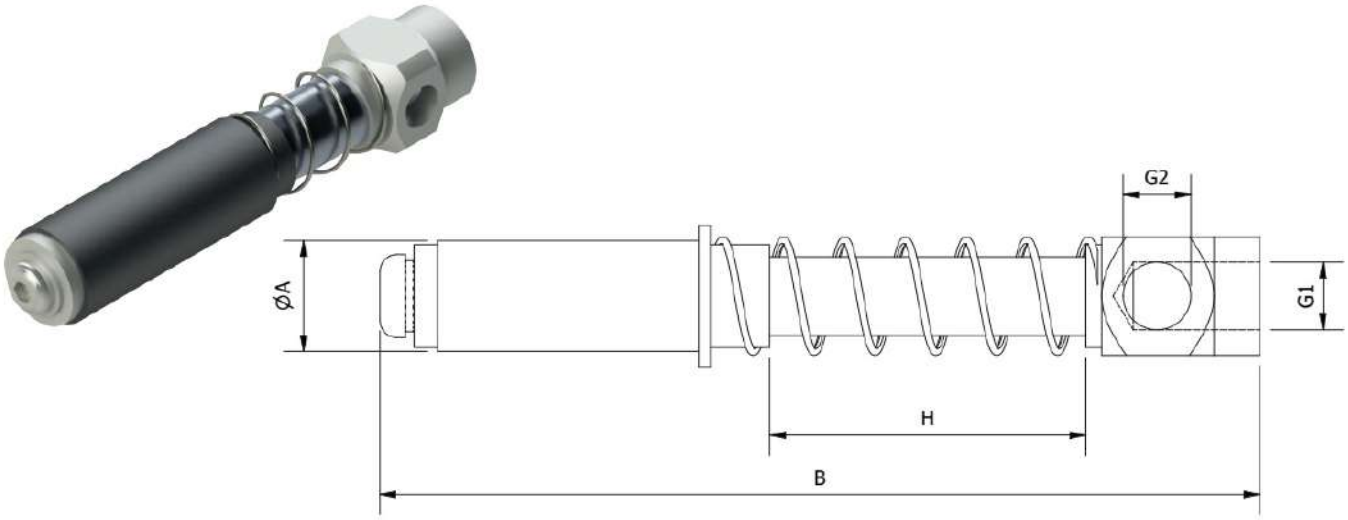

Part No.	A	B	G1	G2	H	F(N)	Weight (g)
MA.GGD.10050510	10	59	M5	M5	10	8	11
MA.GGD.10050530	10	85	M5	M5	30	11	15
MA.GGD.14181815	14	84	G1/8	G1/8	15	9	33
MA.GGD.14181840	14	109	G1/8	G1/8	40	14,6	38
MA.GGD.20141820	20	109	G1/4	G1/8	20	11,7	76
MA.GGD.20141850	20	147	G1/4	G1/8	50	16,8	92

For use with round vacuum cups only.

MA.GGDG. – Spring Loaded Vacuum Cup Arm Threaded Body (Rotative)

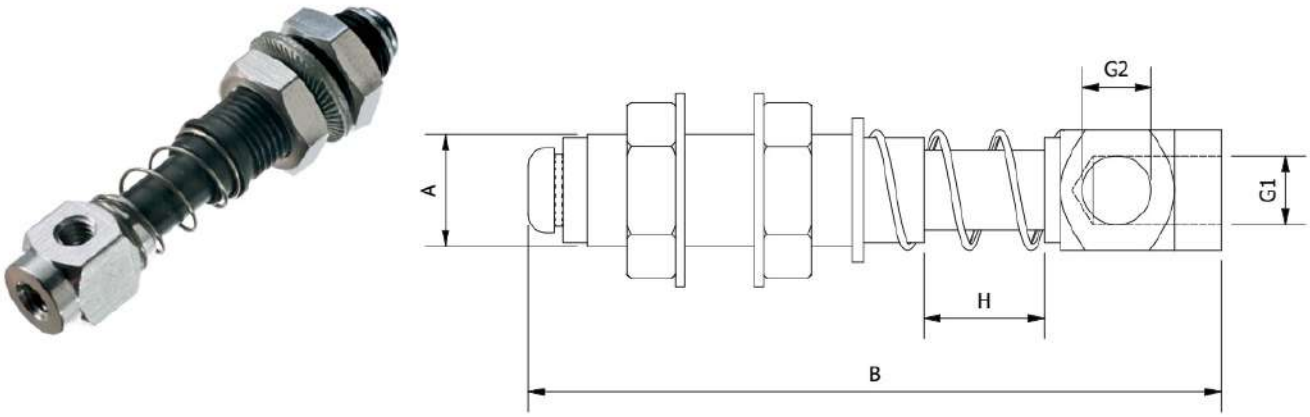

Part No.	A	B	G1	G2	H	F(N)	Weight (g)
MA.GGDG.10050510	M10x1	59	M5	M5	10	8	17
MA.GGDG.10050530	M10x1	85	M5	M5	30	11	20
MA.GGDG.14181815	M14x1.5	86	G1/8	G1/8	15	9	41
MA.GGDG.14181840	M14x1.5	111	G1/8	G1/8	40	14.6	45
MA.GGDG.20141820	M20x1.5	109	G1/4	G1/8	20	11.7	99
MA.GGDG.20141850	M20x1.5	147	G1/4	G1/8	50	16.8	118

For use with round vacuum cups only.

SUSPENSIONS FOR VACUUM CUPS

SZR. – Spring Loaded Vacuum Cup Arm Smooth Body (Rotative)

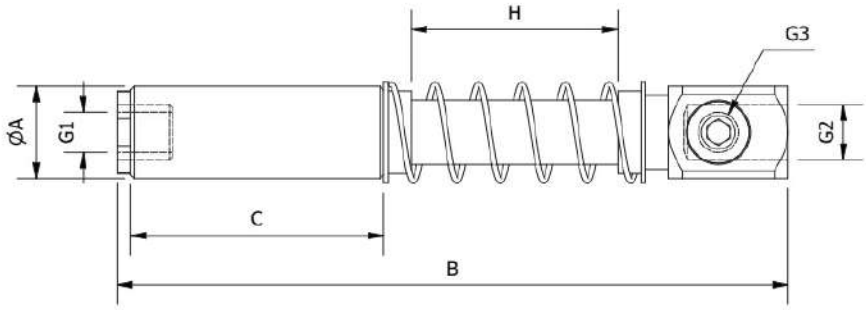

Part No.	A	B	C	G1	G2	G3	H	Weight (g)
SZR.1010.0505	10	59	25	M5	M5		10	28
SZR.1030.0505	10	79	25	M5	M5		30	31
SZR.1415.1818	14	83	32	M5	G1/8	G1/8	15	55
SZR.1440.1818	14	108	32	M5	G1/8	G1/8	40	60
SZR.2025.1418	20	121	55	G1/8	G1/4	G1/8	25	137
SZR.2050.1418	20	146	55	G1/8	G1/4	G1/8	50	144

For use with round vacuum cups only.

SZRG. – Spring Loaded Vacuum Cup Arm Threaded Body (Rotative)

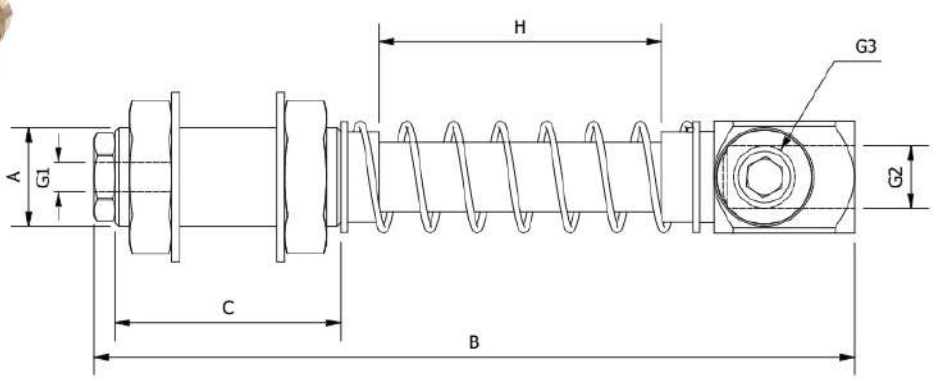

Part No.	A	B	C	G1	G2	G3	H	Weight (g)
SZRG.1010.0505	M10x1	59	25	M5	M5		10	32
SZRG.1030.0505	M10x1	79	25	M5	M5		30	35
SZRG.1415.1818	M14x1.5	83	32	M5	G1/8	G1/8	15	67
SZRG.1440.1818	M14x1.5	108	32	M5	G1/8	G1/8	40	72
SZRG.2025.1418	M20x1.5	121	55	G1/8	G1/4	G1/8	25	171
SZRG.2050.1418	M20x1.5	146	55	G1/8	G1/4	G1/8	50	187

For use with round vacuum cups only.

SZP. – Spring Loaded Vacuum Cup Arm Smooth Body (Non-rotative) Swivel Head

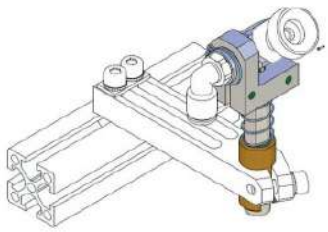

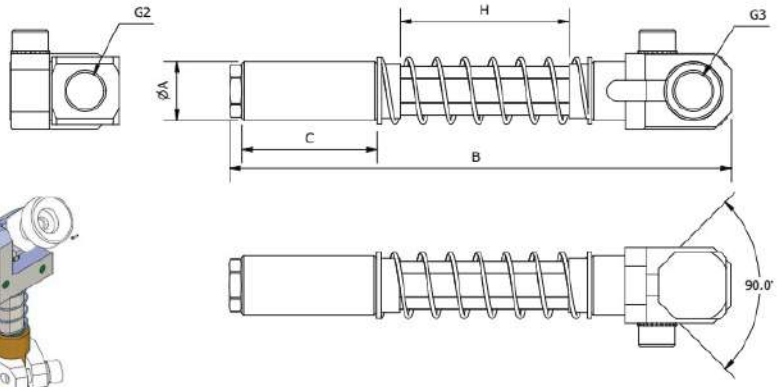

Part No.	A	B	C	G2	G3	H	Weight (g)
SZP.1010.0505	10	76	25	M5		10	32
SZP.1030.0505	10	96	25	M5		30	35
SZP.1415.1818	14	94	32	G1/8	G1/8	15	67
SZP.1440.1818	14	119	32	G1/8	G1/8	40	72
SZP.2025.1418	20	131	55	G1/4	G1/8	25	171
SZP.2050.1418	20	156	55	G1/4	G1/8	50	187

For use with round and oval vacuum cups .
Angle of vacuum cup adjustable between 0°and 90°.
Non Rotative.

SZPG. – Spring Loaded Vacuum Cup Arm Threaded Body (Non-rotative) Swivel Head

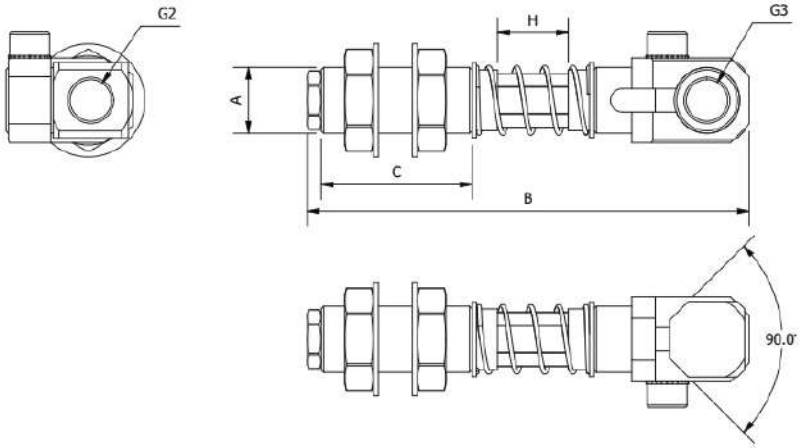

Part No.	A	B	C	G2	G3	H	Weight (g)
SZPG.1010.0505	M10x1	76	25	M5	-	10	39
SZPG.1030.0505	M10x1	96	25	M5	-	30	44
SZPG.1415.1818	M14x1.5	94	32	G1/8	G1/8	15	70
SZPG.1440.1818	M14x1.5	119	32	G1/8	G1/8	40	90
SZPG.2025.1418	M20x1.5	131	55	G1/4	G1/8	25	188

For use with round and oval vacuum cups.
Angle of vacuum cup adjustable between 0°and 90°.
Non Rotative.

SUSPENSIONS FOR VACUUM CUPS

SZN. – Spring Loaded Vacuum Cup Arm Smooth Body (Non-rotative)

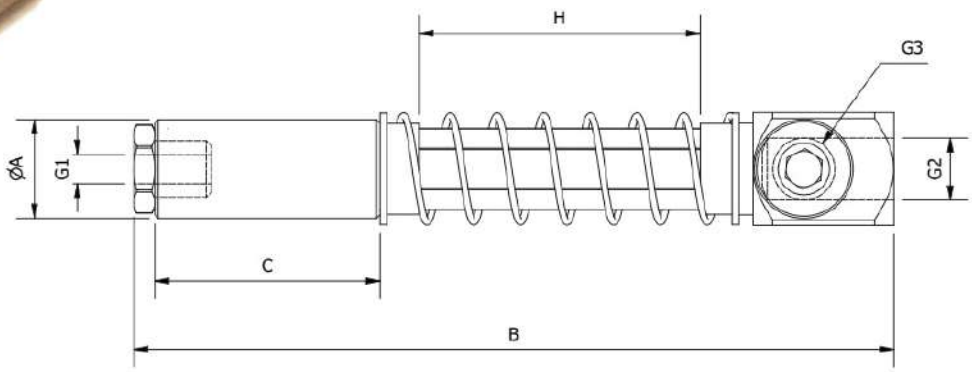

Part No.	A	B	C	G1	G2	G3	H	Weight (g)
SZN.1010.0505	10	59	25	M5	M5		10	25
SZN.1030.0505	10	79	25	M5	M5		30	27
SZN.1415.1818	14	83	32	M5	G1/8	G1/8	15	52
SZN.1440.1818	14	108	32	M5	G1/8	G1/8	40	55
SZN.2025.1418	20	121	55	G1/8	G1/4	G1/8	25	137
SZN.2050.1418	20	146	55	G1/8	G1/4	G1/8	50	140

For use with round and oval vacuum cups.
Non Rotative.

SZNG. – Spring Loaded Vacuum Cup Arm Threaded Body (Non-rotative)

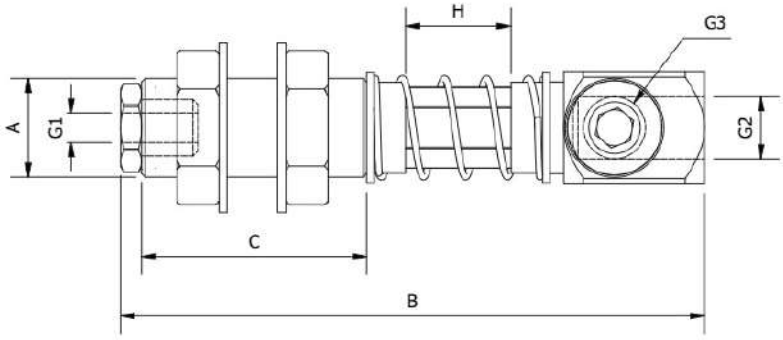

Part No.	A	B	C	G1	G2	G3	H	Weight (g)
SZNG.1010.0505	M10x1	59	25	M5	M5	-	10	30
SZNG.1030.0505	M10x1	79	25	M5	M5	-	30	32
SZNG.1415.1818	M14x1.5	83	32	M5	G1/8	G1/8	15	63
SZNG.1440.1818	M14x1.5	108	32	M5	G1/8	G1/8	40	65
SZNG.2025.1418	M20x1.5	121	55	G1/8	G1/4	G1/8	25	170
SZNG.2050.1418	M20x1.5	146	55	G1/8	G1/4	G1/8	50	173

For use with round and oval vacuum cups.
Non Rotative.

LC. – Level Compensator Smooth Body (Non-rotative)

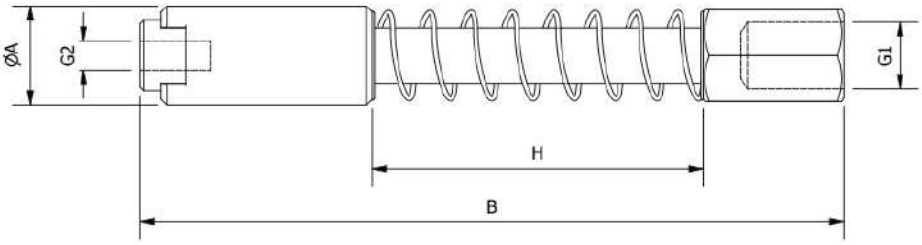

Part No.	A	B	G1	G2	H	F(N)	Weight (g)
LC.10.20	10	69	M5	M5	20	3,4	26
LC.12.20	12	69	M5	M5	20	18,4	33
LC.14.38	14	100	G1/8	M5	38	23,3	63
LC.20.48	20	125	G1/4	G1/8	48	16,6	155

Spring: Steel.
Sliding Parts: Chrome-plated Brass.
Terminal Parts: Anodized Aluminium.

LC.M. – Level Compensator Threaded Body (Non-rotative)

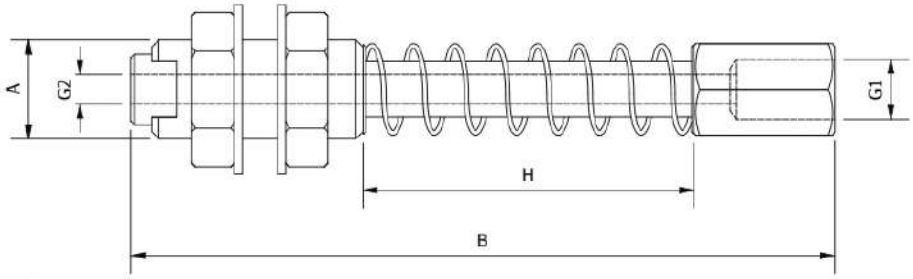

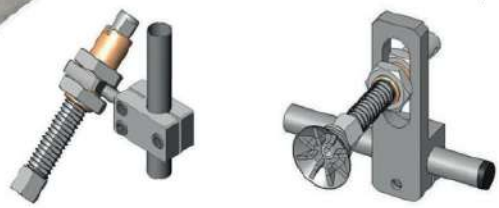

Part No.	A	B	G1	G2	H	F(N)	Weight (g)
LC.M10.20	M10x1	70	M5	M5	20	3,4	36
LC.M12.20	M12x1.25	77	G1/8	M5	20	6	40
LC.M14.38	M14x1.5	100	G1/8	M5	38	23,2	71
LC.M20.48	M20x1.5	125	G1/4	G1/8	48	16,7	189

Spring: Steel.
Sliding Parts: Chrome-plated Brass.
Terminal Parts: Anodized Aluminium.

SUSPENSIONS FOR VACUUM CUPS

SR. – Spring Rod

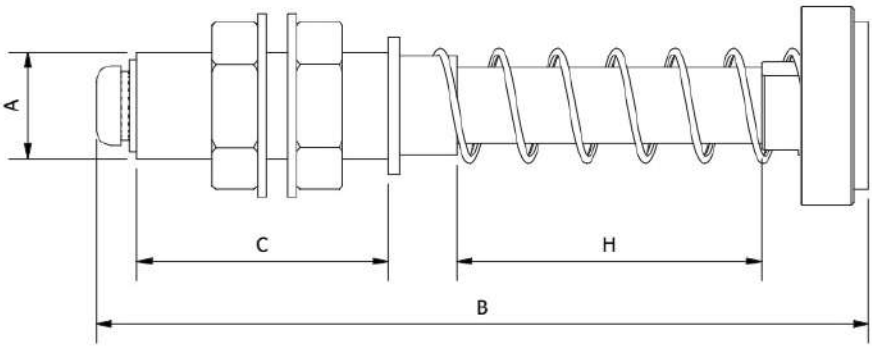

Part No.	A	B	C	H	Weight (g)	Weight (g)
SRR.1440	M14x1.5	101	42	40	47	25

Flat Vacuum Cups Ø22-Ø 53 mm

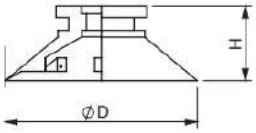

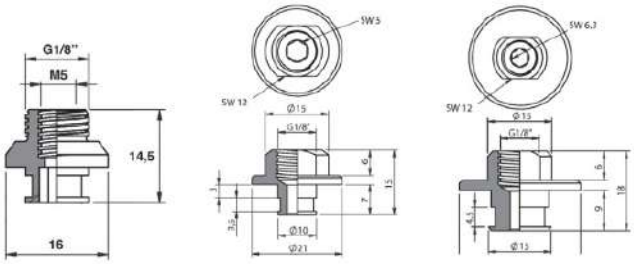

Part No. Silicone	Part No. TempFlex HT		ØD	H	Retaining Ring No.	Part No.	Part No.	Part No.
F20S	F20HT	0,5	22	8	R.011	F250		
F25S	F25HT	1	28	9	R.011	F250		
F30S	F30HT	1,5	32	10	R.011	F250		
F40S	F40HT	2	42	13	R.012		F251	
F50S	F50HT	3	53	17,5	R.013			F252

Bellow Vacuum Cups - 1,5 Bellow, Ø11 and Ø16 mm

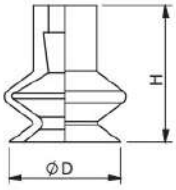

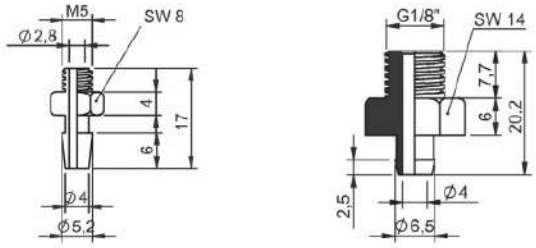

Part No. Silicone	Part No. TempFlex HT		ØD	H	Part No.	Part No.
B11S	B11HT	5	11	17	F134	130.003
B16S	B16HT	7	16	19	F134	130.003

VACUUM CUPS

Bellow Vacuum Cups - 1,5 Bellow, Ø20-Ø52 mm

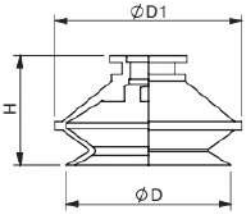

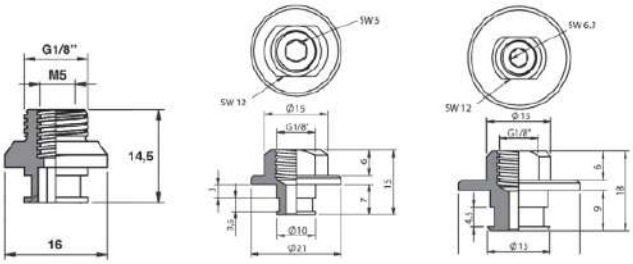

Part No. Silicone	Part No. TempFlex HT		ØD	Ø D1	H	Part No.	Part No.	Part No.
B20S	B20HT	9 mm	21,5	24	20	F250		
B30S	B30HT	9 mm	33	36	26	F250		
B40S	B40HT	9 mm	42	46	28		F251	
B50S	B50HT	12 mm	52	58	35			F252

Bellow Vacuum Cups - 1,5 Bellow, Ø11-Ø25 mm

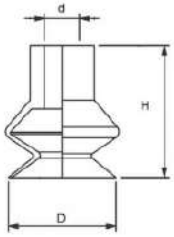

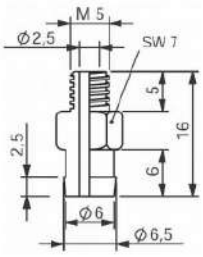

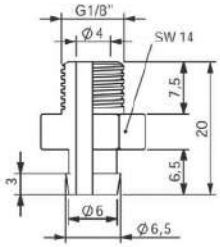

Part No. Silicone	Part No. TempFlex HT	Bellow	D	d	H	M5 Fitting	1/8 Fitting
CL-1.5-11-S	CL-1.5-11-HT	1,5	11	5	16	130.013	130.003
CL-1.5-14-S	CL-1.5-14-HT	1,5	14	5	16	130.013	130.003
CL-1.5-16-S	CL-1.5-16-HT	1,5	16	5	19	130.013	130.003
CL-1.5-20-S	CL-1.5-20-HT	1,5	20	5	16	130.013	130.003
CL-1.5-25-S	CL-1.5-25-HT	1,5	25	5	23	130.013	130.003

Bellow Vacuum Cups - 1,5 Bellow, Ø33-Ø53 mm

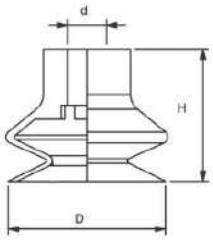

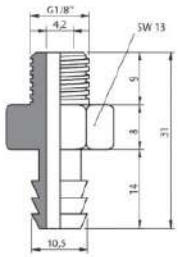

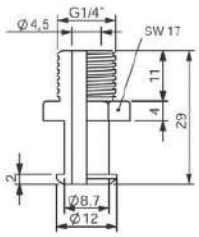

Part No. Silicone	Part No. TempFlex HT	Bellow	D	d	H	1/8 Fitting	1/4 Fitting
CL-1.5-30-S	CL-1.5-30-HT	1,5	33	8	28	130.132	130.190
CL-1.5-43-S	CL-1.5-43-HT	1,5	43	8	28	130.132	130.190
CL-1.5-53-S	CL-1.5-53-HT	1,5	53	8	34	130.132	130.190

Bellow Vacuum Cups - 1,5 Bellow, Ø15 mm

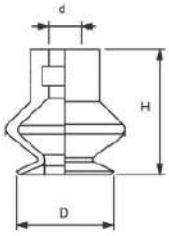

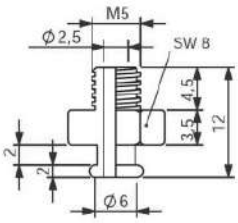

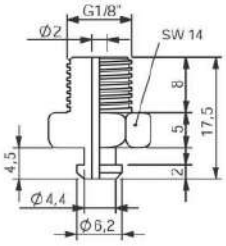

Part No. Silicone	Part No. TempFlex HT	Bellow	D	d	H	M5 Fitting	1/8 Fitting
CM-1.5-15-S	CM-1.5-15-HT	1,5	15	4	16	130.301	130.009

Bellow Vacuum Cups - 1,5 Bellow, Ø20-Ø40 mm

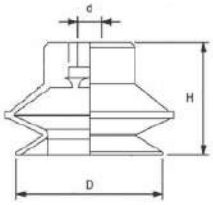

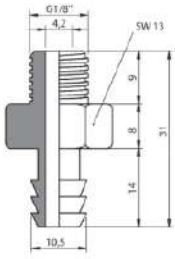

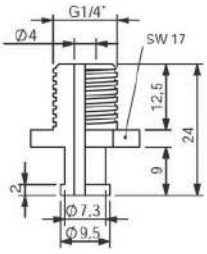

Part No. Silicone	Part No. TempFlex HT	Bellow	D	d	H	1/8 Fitting	1/4 Fitting
CM-1.5-20-S	CM-1.5-20-HT	1,5	20	6	20	130.030	130.274
CM-1.5-30-S	CM-1.5-20-HT	1,5	30	6	30,5	130.030	130.274
CM-1.5-40-S	CM-1.5-20-HT	1,5	40	6	30,5	130.030	130.274

Bellow Vacuum Cups - 2,5 Bellow, Ø5-Ø25 mm

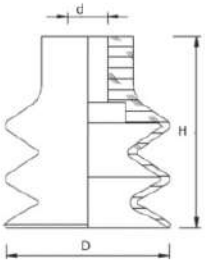

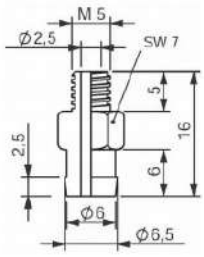

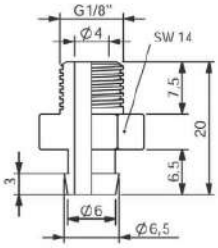

Part No. Silicone	Part No. TempFlex HT		Bellow	D	d	H	M5 Fitting	1/8 Fitting
CL-2.5-5	CL-2.5-5-HT	3	2,5	5	4	14	130.013	130.003
CL-2.5-7	CL-2.5-7-HT	3	2,5	7	3,8	14	130.013	130.003
CL-2.5-9	CL-2.5-9-HT	2	2,5	9	4,2	15	130.013	130.003
CL-2.5-12	CL-2.5-12-HT	8,5	2,5	12	5	21	130.013	130.003
CL-2.5-14	CL-2.5-14-HT	11	2,5	14	4	23	130.013	130.003
CL-2.5-20	CL-2.5-20-HT	8	2,5	20	5	22	130.013	130.003
CL-2.5-25	CL-2.5-25-HT	19	2,5	25	5	34	130.013	130.003

Bellow Vacuum Cups - 2,5 Bellow, Ø32-Ø42 mm

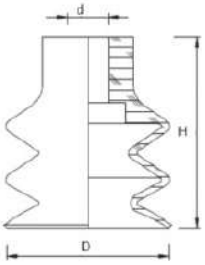

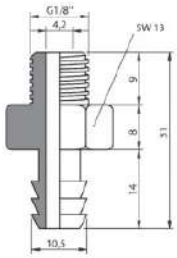

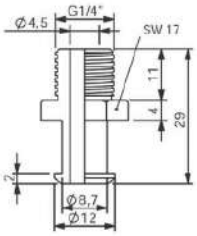

Part No. Silicone	Part No. TempFlex HT		Bellow	D	d	H	1/8" Fitting	1/4" Fitting
CL-2.5-32	CL-2.5-32-HT	13	2,5	32	8	37	130.132	130.190
CL-2.5-42	CL-2.5-42-HT	13	2,5	42	8	46	130.132	130.190

VACUUM CUPS

Mouldpro Multiflex vacuum cups offer outstanding advantages

- Extremely high wear resistance
- Very high lifting force
- Best static friction qualities
- No sticking tendency
- Elasticity remains unchanged for minus temperatures
- Working temperatures from -20°C to + 80°C
- Antimarking

Vacuum Cups - 1,5 Bellow, Ø10-Ø50 mm

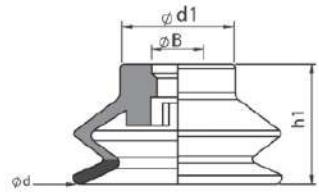

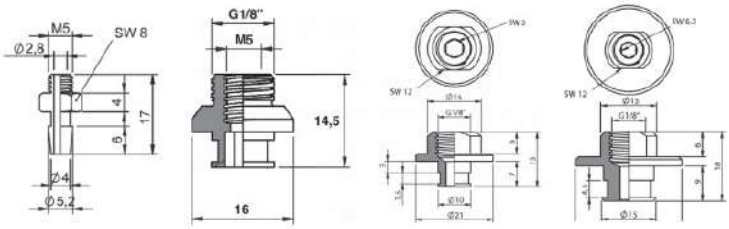

Part No.		d	B	d1	h1	Hardness	Part No.	Part No.	Part No.	Part No.
B15-10MF	5,5	10	3,9	9	16,5	40	F134			
B15-16MF	5,5	16	3,9	9	19	30/60	F134			
B15-20MF	7,6	21	5,2	12	18	30/60		F250		
B15-30MF	7,5	31	6,5	16,8	17	30/60			F251	
B15-40MF	9,3	41	6,3	22,4	22,4	30/60			F251	
B15-50MF	14,4	51	10,5	28	29,2	30/60				F252

Vacuum Cups - 2,5 Bellow, Ø20-Ø50 mm

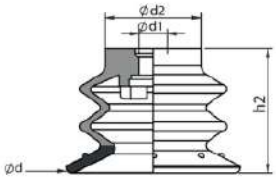

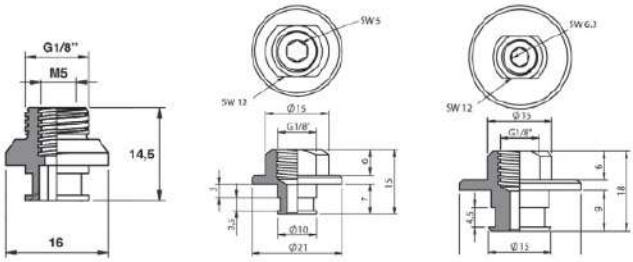

Part No.		d	d1	d2	h2	Hardness	Part No.	Part No.	Part No.
B25-20MF	6,5	20,5	5	12	14,8	30/60	F250		
B25-25MF	8	26	5	15,4	18,9	30/60	F250		
B25-30MF	11	30	5	16,5	21,3	30/60	F250		
B25-35MF	11	35	6,5	21	25,63	30/60		F251	
B25-40MF	14,7	40	6,5	22	28,4	30/60		F251	
B25-50MF	20	50	10,5	27,5	35,5	30/60			F252

VACUUM CUP PROPERTIES

Type Selection Guide

Type		
Flat Cups	The flat suction cups provide accurancy in load gripping and speeds up the cycle process. Flat cups are used only on flat surfaces.	
1,5 Bellow Cups	The 1,5 bellow cups combine the advantages of the flat suction cups (precision and positioning) with the freedom of belows (angle and flexibility). They provide flexibility, precision and low internal volume suitable for high-speed applications.	
2,5 Bellow Cups	The suction cups with 2,5 bellow are recommended for gripping products with un-even surfaces (large deflection). The 2,5 bellow allow objects to be gripped from an angle (ball-joint effect).	

Material Properties

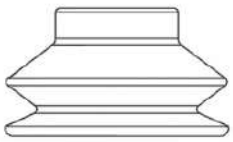
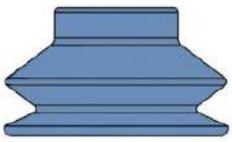
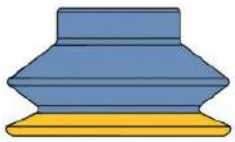

Application	Silicone	FlexTemp HT	Multiflex
Ozone resistance	✓✓✓	✓✓	✓✓✓
Oil resistance	✓	✓✓✓	✓✓
Wear resisitance	✓✓	✓✓	✓✓✓
Tensile strength (lifting force)	✓	✓	✓✓✓
Leaves marks on products	✓	✓✓	✓✓✓
Temperature resistance	-70 to + 200°C	-40 to + 160°C	-20 to + 80°C
Shore hardness	30-60°	60°	30-60°

The holding force of the suction cups increases proportionally with the difference between the ambient pressure and the pressure inside the cup.

The holding force of a suction pad is calculated with the formula:
F = $\Delta p \times A$.
F = Holding force.
Δp = Difference between ambient pressure and pressure of the system.
A = Effective suction area (the effective area of a suction pad under vacuum).

This means the holding force is proportional to the pressure difference and the suction area. The greater the difference between ambient pressure and pressure in the suction cup or the larger the effective suction area, the greater the holding force.
The force can vary depending on a change of the pressure difference and area parameters.

MSG. – Sprue Grippers M Series

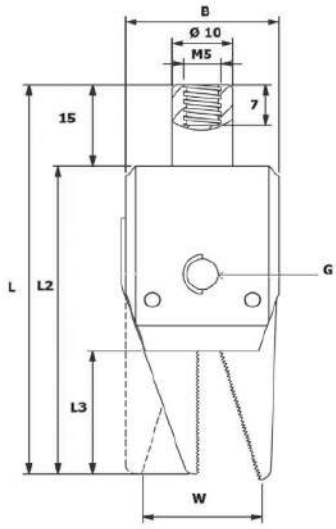

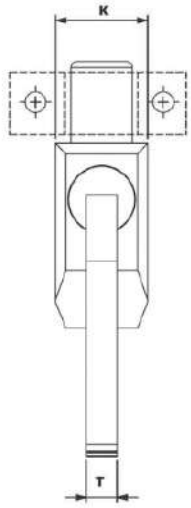

Part No.	W	T	L3	L2	G	L	K	Grip Force	B	Weight (g)
MSG30	6,0	3	12	30	M4	45	8	10 N	15	
MSG40	9,4	4	16	40	M6	55	10	15 N	20	
MSG50	14,0	5	20	50	M6	66	12	23 N	25	
MSG60	16,3	6	24	60	M6	76	14	31 N	30	

Compressed air supply: max. 6 bar.
Operating Temperature : 5° to 70°C

GZ12-10-8-(Short) – Sprue Grippers 12-10-8 Short Series

GZ12-10-8 GZ12-10-8-L GZ12-10-8-A GZ12-10-8-LL GZ12-10-8-S/SN

GZ12-10-8-W GZ12-10-8-G

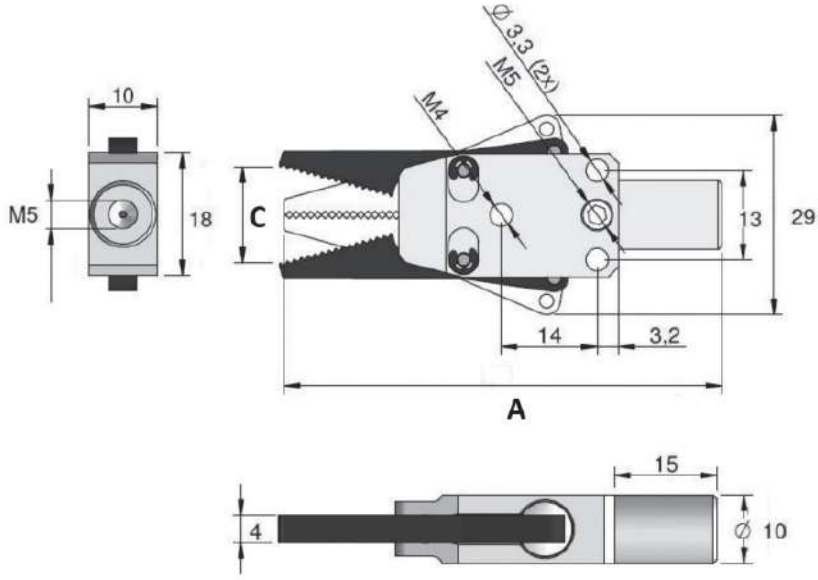

Part No.	C	A	Jaw Type	Sensor	Closing Force (6 bar)	Weight (g)
GZ12-10-8	14	63,9	Serrated	-	19N	30
GZ12-10-8-L	11	59	Diamond Pattern	-	19N	32
GZ12-10-8-A	13	64	Saw tooth	-	19N	30
GZ12-10-8-LL	14	64	Smooth	-	19N	30
GZ12-10-8-W	14	64,1	Extra Wide	-	19N	30
GZ12-10-8-G	14	63,9	Viton rubber Pad	-	19N	30
GZ12-10-8-S	11	61,8	Serrated	PNP	19N	30
GZ12-10-8-SN	11	61,8	Serrated	NPN	19N	30

Compressed air in compliance with ISO 8573-1:2010 [7:4:4].
Maximum Operating Pressure 8 bar.

GZ-VIT – Insert Pad, Viton

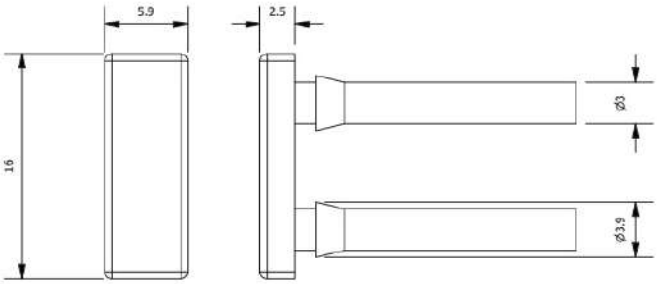

Part No.	Material	REF	Weight (g)
GZ-VIT-4	FKM	GZ12-10-8-G	

GZ-SCP – Sensor for GZ-10-8, 12-10

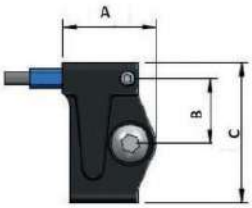

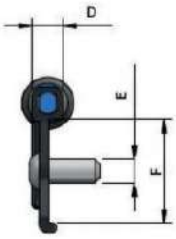

Part No.	Output	Sensor Type	Sensing Distance	Connector	Weight (g)
GZ-SCP-10-8	PNP	Magnetic	0-50mm	M8 4pin	65
GZ-SCP-12-10	PNP	Magnetic	0-50mm	M8 4pin	65

SMALL SPRUE GRIPPERS

GZ12-10-10-(Standard) – Sprue Grippers 12-10 Standard Series

GZ12-10-10-M

GZ12-10-10-C

GZ12-10-10-CKP/CKN

GZ12-10-10-MC

GZ12-10-10-W

GZ12-10-10-B

GZ12-10-10-L

GZ12-10-10-L90

GZ12-10-10-LL

GZ12-10-10-MF

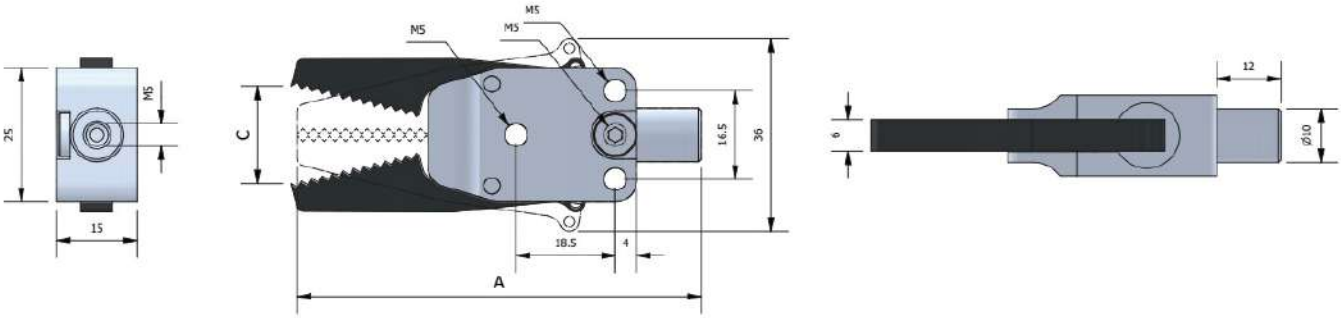

Part No.	C	A	Jaw Type	Sensor	Closing Force (6 bar)	Weight (g)
GZ12-10-10-M	19,5	75	Serrated		30N	40
GZ12-10-10-C	17,9	75	Curved		30N	36
GZ12-10-10-CKP	19	76	Curved	PNP	30N	45
GZ12-10-10-CKN	19	76	Curved	NPN	30N	45
GZ12-10-10-MC	19	75	1 Serated/1 Curved		30N	37
GZ12-10-10-W	20	75,3	Wide		30N	39
GZ12-10-10-B	13	59,3	Custom		30N	32
GZ12-10-10-L	20	76,5	Diamond Pattern		30N	36
GZ12-10-10-L90	19,3	76	Diamond Pattern - 90°		30N	43
GZ12-10-10-LL	19,8	75,3	Smooth		30N	40
GZ12-10-10-MF	19,6	76,5	Serrated Steel		30N	58

Compressed air in compliance with ISO 8573-1:2010 [7:4:4].
Maximum Operating Pressure 8 bar.

GZ-VIT – Jaw Insert Pad - Viton

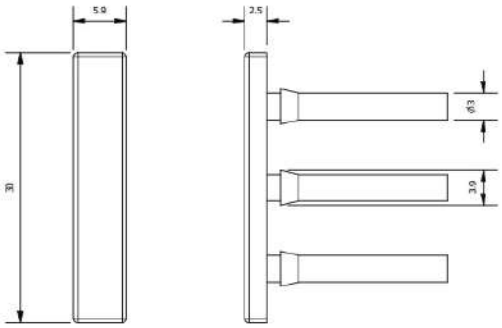

Part No.	Material	REF	Weight (g)
GZ-VIT-6	FKM	GZ12-10-8-G	4

Sprue Gripper GZ12-10-10..(Long) – Sprue Grippers 12-10 Long Series

GZ12-10-10 GZ12-10-10-KP/KN GZ12-10-10-A GZ12-10-10-AKP/AKN GZ12-10-10-G

GZ12-10-10-GKP/GKN

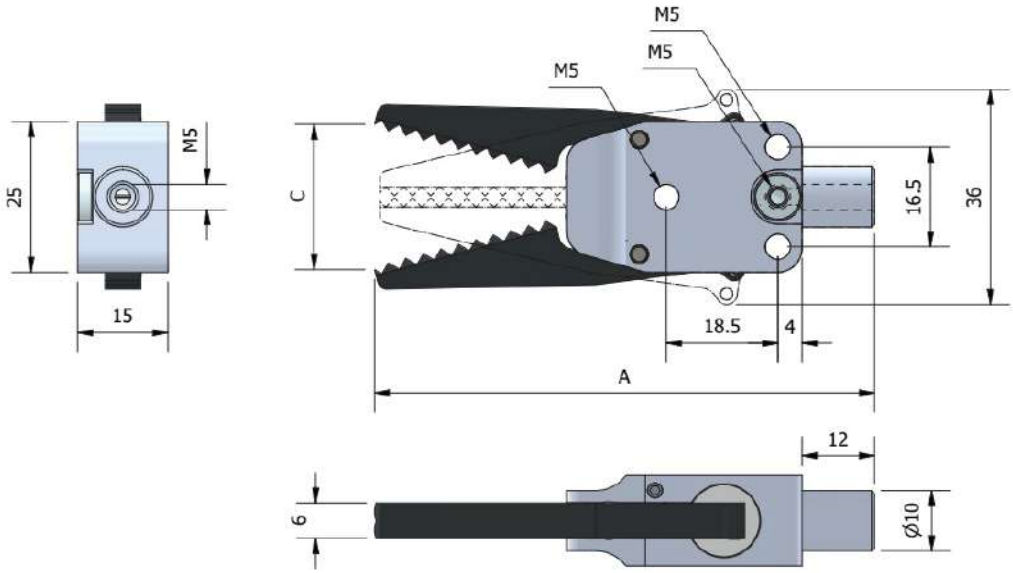

Part No.	C	A	Jaw Type	Sensor	Closing Force (6 bar)	Weight (g)
GZ12-10-10	24	83	Diamond Pattern		30N	40
GZ12-10-10-KP	23	83	Diamond Pattern	PNP	30N	51
GZ12-10-10-KN	23	83	Diamond Pattern	NPN	30N	51
GZ12-10-10-A	21,3	82	Saw Tooth		30N	38
GZ12-10-10-AKP	23	83	Saw Tooth	PNP	30N	51
GZ12-10-10-AKN	23	83	Saw Tooth	NPN	30N	51
GZ12-10-10-G	22,3	82	Viton Rubber Pad		30N	37
GZ12-10-10-GKP	22	83	Viton Rubber Pad	PNP	30N	48
GZ12-10-10-GKN	22	83	Viton Rubber Pad	NPN	30N	48

Compressed air in compliance with ISO 8573-1:2010 [7:4:4].
Maximum Operating Pressure 8 bar.

GZ-VIT – Jaw Insert Pad - Viton

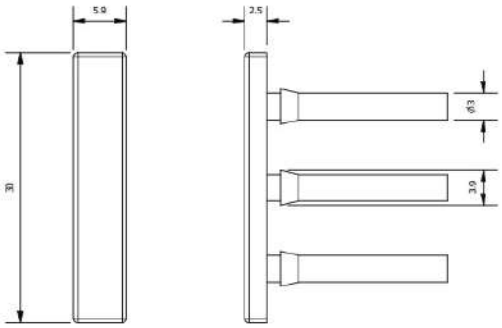

Part No.	Material	REF	Weight (g)
GZ-VIT-6	FKM	GZ12-10-8-G	4

SN. – Sensor

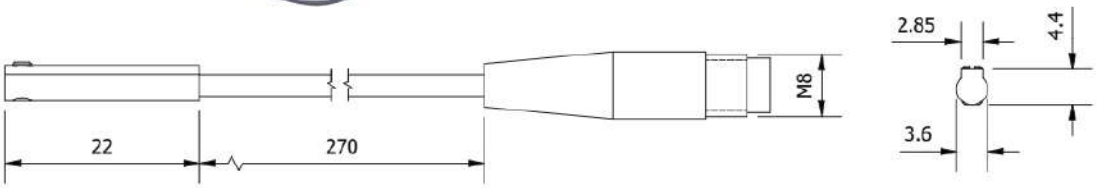

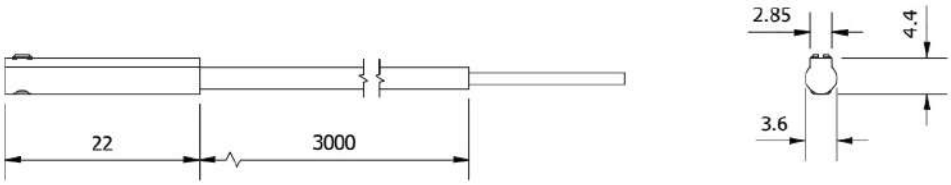

Part No.	Output	Sensor type	Connector	Lead - m	Weight (g)
SN.K5P.M8	PNP	Electronic	M8 3pin	0,3	4
SN.K5N.M8	NPN	Electronic	M8 3pin	0,3	4
SN.K5P.3MW	PNP	Electronic	-	3	4
SN.K5N.3MW	NPN	Electronic	-	3	4

GZ.2016. – Sprue Gripper 20-16, Series

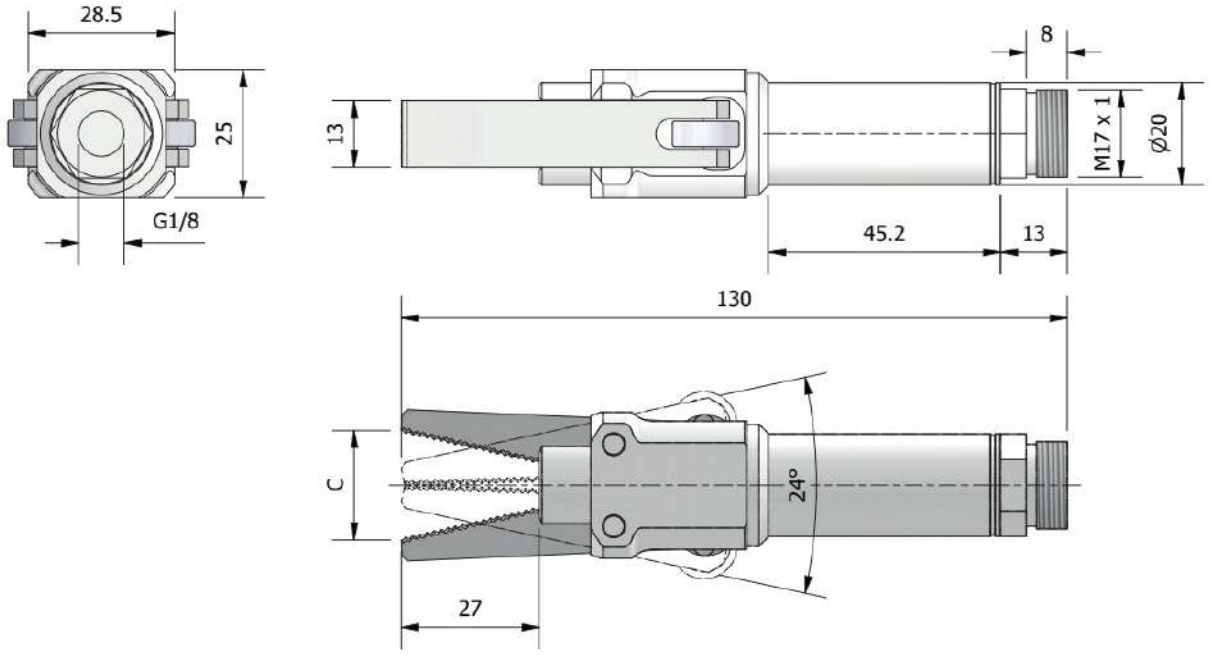

Part No.	Jaw Type	C	Sensor	Closing Force (6 bar)	Weight (g)
GZ.2016	Diamond Pattern	20		65N	163
GZ.2016.KP	Diamond Pattern	22	PNP	65N	160
GZ.2016.KN	Diamond Pattern	22	NPN	65N	160
GZ.2016ST	Saw Tooth	24		65N	157
GZ.2016ST.KP	Saw Tooth	21	PNP	65N	154
GZ.2016ST.KN	Saw Tooth	21	NPN	65N	154
GZ.2016V	Viton Rubber Pads	20		65N	109
GZ.2016V.KP	Viton Rubber Pads	21	PNP	65N	117
GZ.2016V.KN	Viton Rubber Pads	21	NPN	65N	117
GZ.2016CC	Curved	19		65N	163
GZ.2016C	1 Curved/1 Diamond Pattern	19		65N	163
GZ.2016C.KP	1 Curved/1 Diamond Pattern	21	PNP	65N	170
GZ.2016C.KN	1 Curved/1 Diamond Pattern	21	NPN	65N	170
GZ.2016A	Custom			65N	135

Compressed air in compliance with ISO 8573-1:2010 [7:4:4].
Maximum Operating Pressure 8 bar.

SN. – Sensor

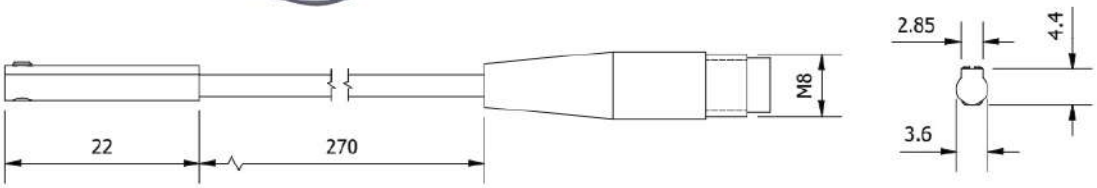

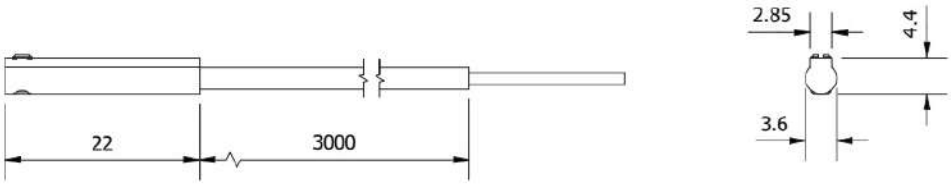

Part No.	Output	Sensor type	Connector	Lead - m	Weight (g)
SN.K5P.M8	PNP	Electronic	M8 3pin	0,3	4
SN.K5N.M8	NPN	Electronic	M8 3pin	0,3	4
SN.K5P.3MW	PNP	Electronic	-	3	4
SN.K5N.3MW	NPN	Electronic	-	3	4

GZ-VIT – Jaw Insert Pad - Viton

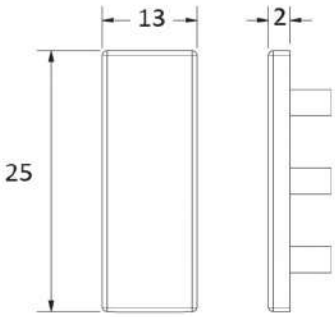

Part No.	Material	REF	Weight (g)
GZ-VIT-8	FKM	GZ.2016V	4

GZ.AA. – Self-Centering Sprue Gripper

GZ.AA24

GZ.AA24.1N/NP

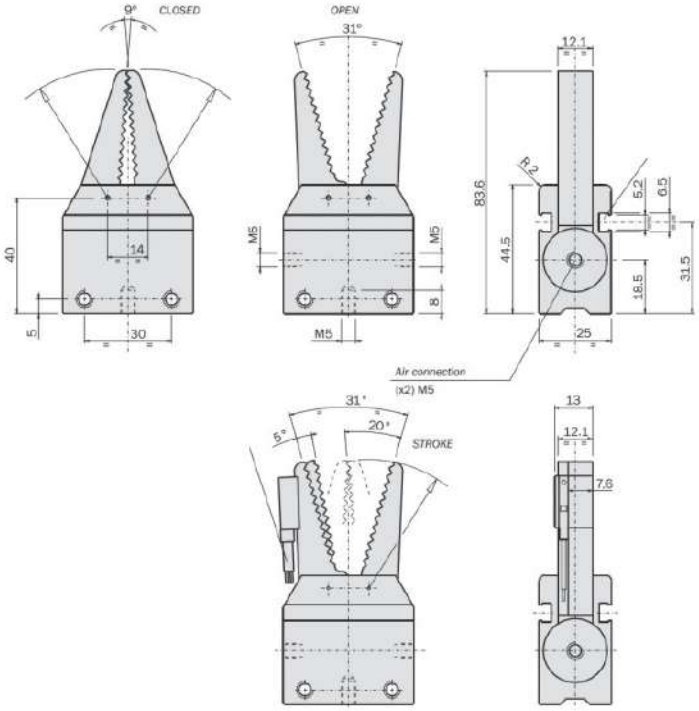

Part No.	Jaw Type	Operation	Sensor	Weight (g)
GZ.AA24	Serrated	Double Acting		115
GZ.AA24.1N	Serrated	Normally Open	NPN	151
GZ.AA24.1P	Serrated	Normally Open	PNP	151

Compressed air in compliance with ISO 8573-1:2010 [7:4:4].
Maximum Operating Pressure 8 bar.

LARGE SPRUE GRIPPERS

GZ20 – Sprue Grippers GZ20 Series

GZ20-10-A

GZ20-10-E

GZ20-10-L

GZ20-10-10

GZ20-10-10-S/SN

GZ20-10-W-S/SN

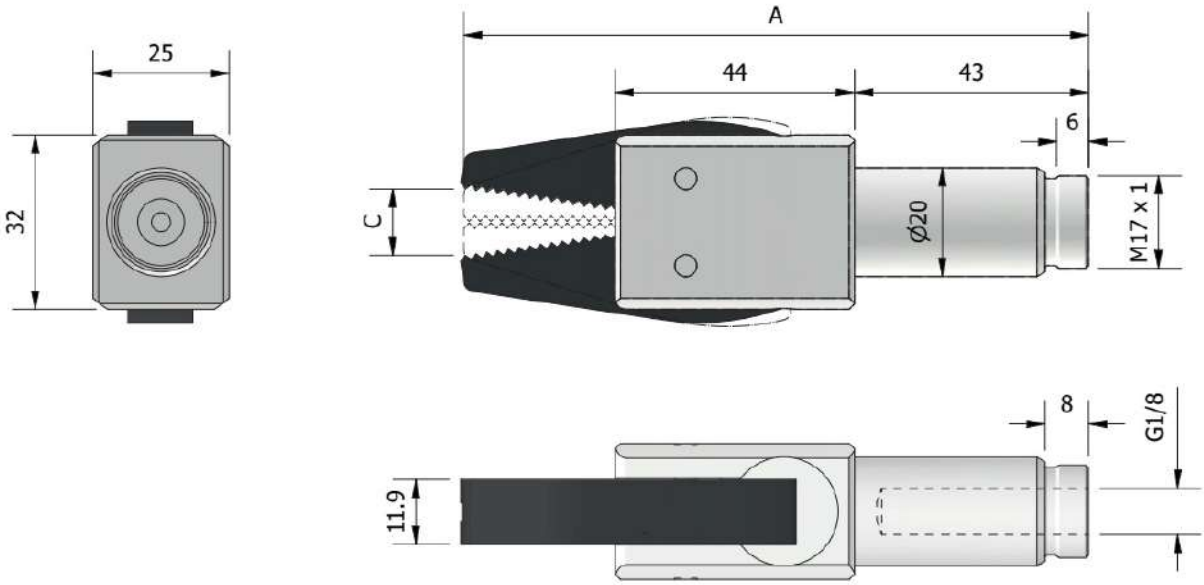

Part No.	Jaw Type	A	C	Sensor Type	Closing Force (6 bar)	Weight (g)
GZ20-10-A	Custom	100	15		90N	114
GZ20-10-E	Curved	115	21		90N	117
GZ20-10-L	Curve-Smooth	115	23		90N	120
GZ20-10-10	Saw Tooth	115	21		90N	121
GZ20-10-10-S	Serrated	115	21	PNP	90N	127
GZ20-10-10-SN	Serrated	115	21	NPN	90N	127
GZ20-10-W-S	Curved	115	21	PNP	90N	123
GZ20-10-W-SN	Curved	115	21	NPN	90N	123

Work principle: Single acting.
Working pressure: 6 bar clean and dry air.
Material: Jaws made of hard-coated Aluminium. Body made of anodized Aluminium.

GZ. – Sensor

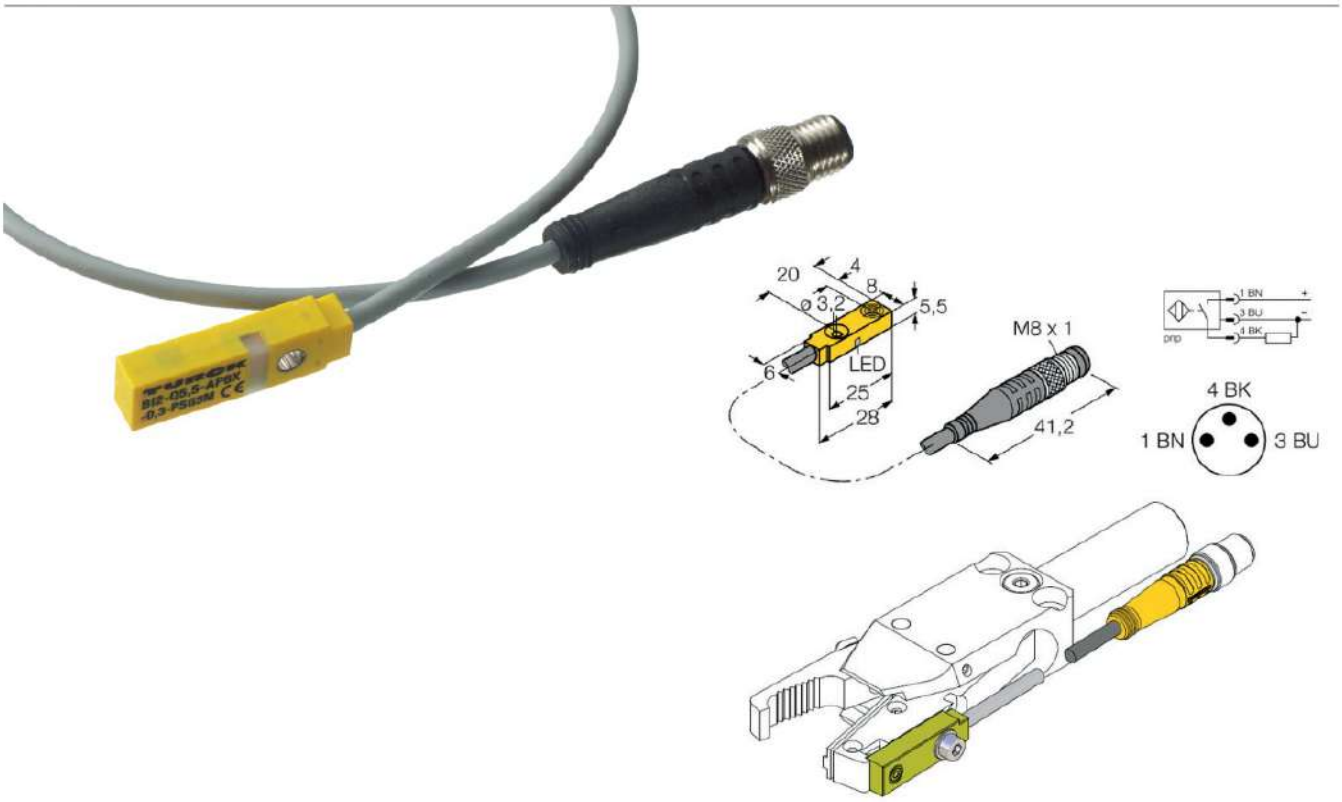

Part No.	Type	Cable length	Connection
GZ20.SM8.PNP	PNP	300	M8
GZ20.SM8.NPN	NPN	300	M8

GSZ.32. – Power Grippers GSZ.32 Series

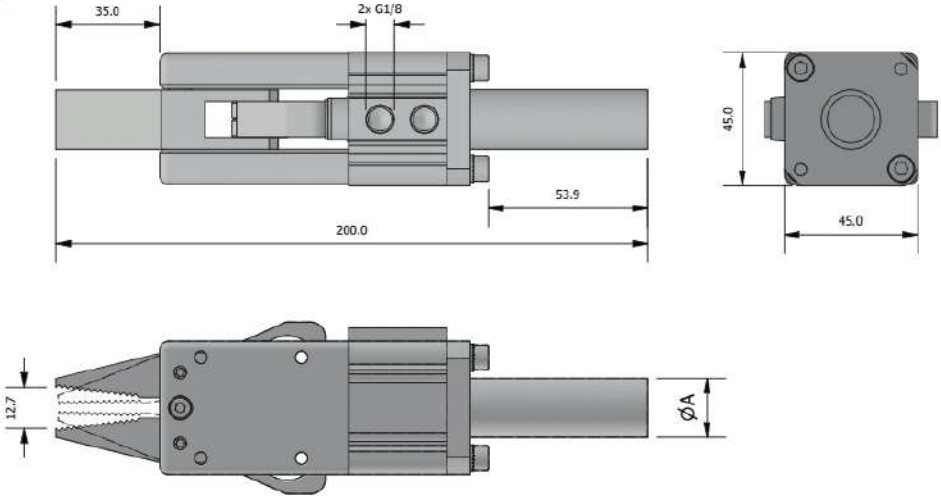

Part No.	A	Jaw Opening - mm	Closing Force (6 bar)	Weight (g)
GSZ.3220	20	12,5	350N	563

GSZ.32. – Power Grippers GSZ.32 Series

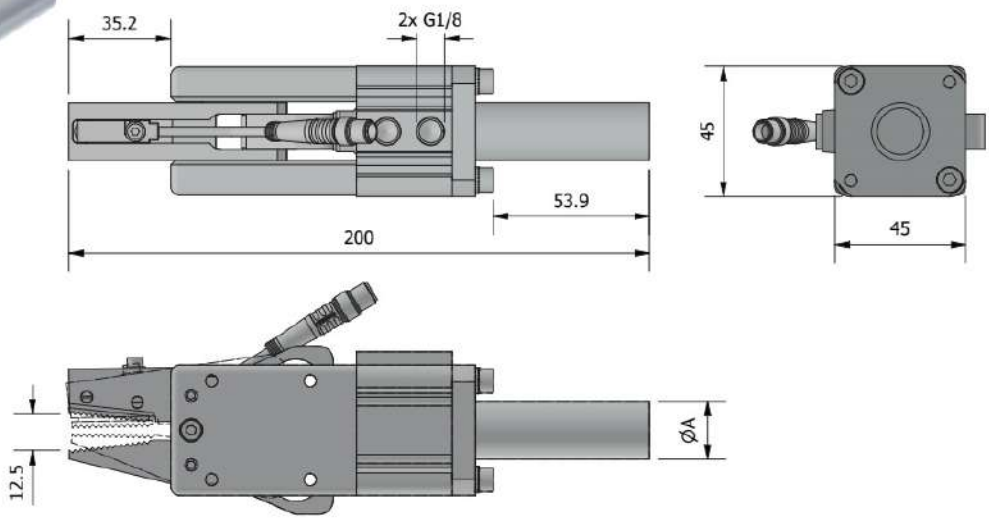

Part No.	A	Jaw Opening - mm	Closing Force (6 bar)	Weight (g)
GSZ.3220-1P	20	12,5	350N	563

GSZ.32. – Power Grippers GSZ.32 Series

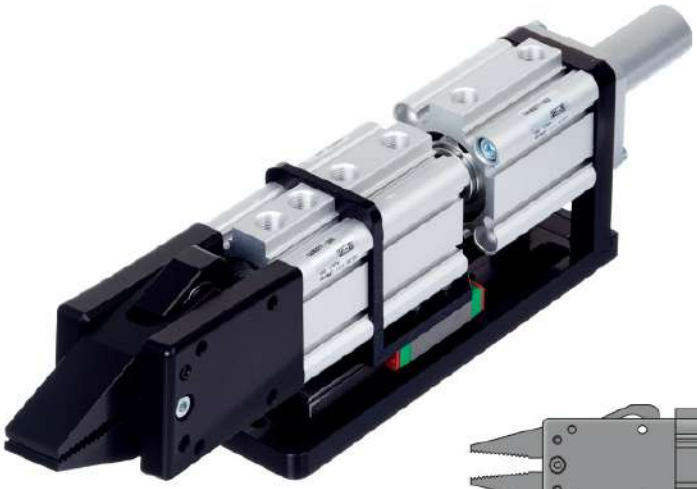

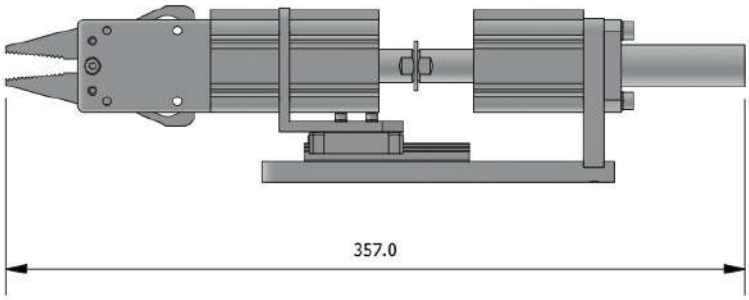

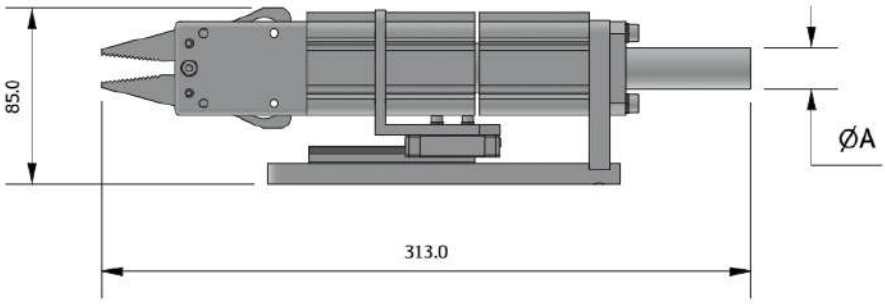

Part No.	A	Jaw Opening - mm	Closing Force (6 bar)	Weight (g)
GSZ.3220.2010	20	12,5	350N	1455

GZ. – Sensor

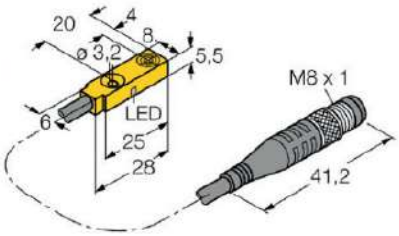

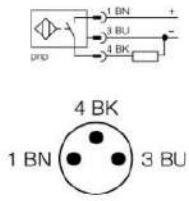

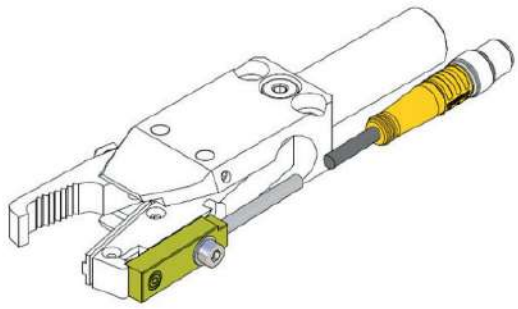

Part No.	Type	Cable length	Connection
GZ20.SM8.PNP	PNP	300	M8
GZ20.SM8.NPN	NPN	300	M8

SRB. – Stroke Reducer

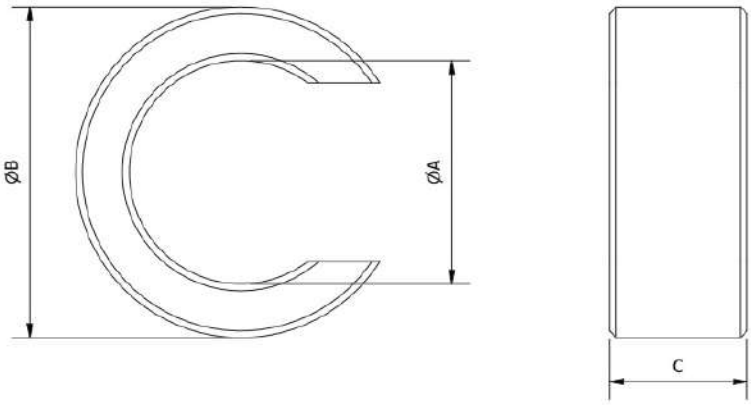

Part No.	A	B	C	Cylinder	Weight (g)
SRB.05.32	16	24	5	32	1
SRB.10.32	16	24	10	32	2
SRB.15.32	16	24	15	32	3

20°- 25° FINGER GRIPPER

GFM. – Finger Grippers 20-22° Direct Mounting

GFM.2020.H

GFM.2022.N

GFM.2022.S

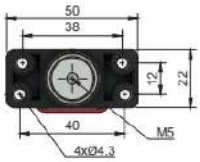

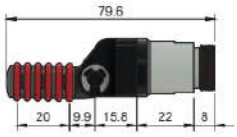

Part No.	Style	Stroke	Max temp of Rings/Pads	Weight (g)
GFM.2020.H	HNBR Pad	21°	150°C	39
GFM.2022.N	Nitrile rings	21°	100°C	42
GFM.2022.S	Silicone Rings	21°	200°C	42

Single-acting.
Soft contact HNBR pads or O-rings in Silicone, NBR.
FDA-H1 food-grade grease.

PAD. – Replacement Pads

PAD.H.20152.5

PAD.H.30223

Part No.	Material	Dimensions mm	Max temp °C
PAD.H.20152.5	HNBR	20x15x2.5	150°
PAD.H.30223	HNBR	30x22x3	150°

KIT-GF. – Replacement O - Rings

KIT-GF20N

KIT-GF20S

Part No.	Material	Max temp °C
KIT-GF20N	Nitrile	100°
KIT-GF20S	Silicon	200°

GF. – Finger Grippers 20-25°

GF.1425.H GF.2021.H GF.2021.N GF.2021.S

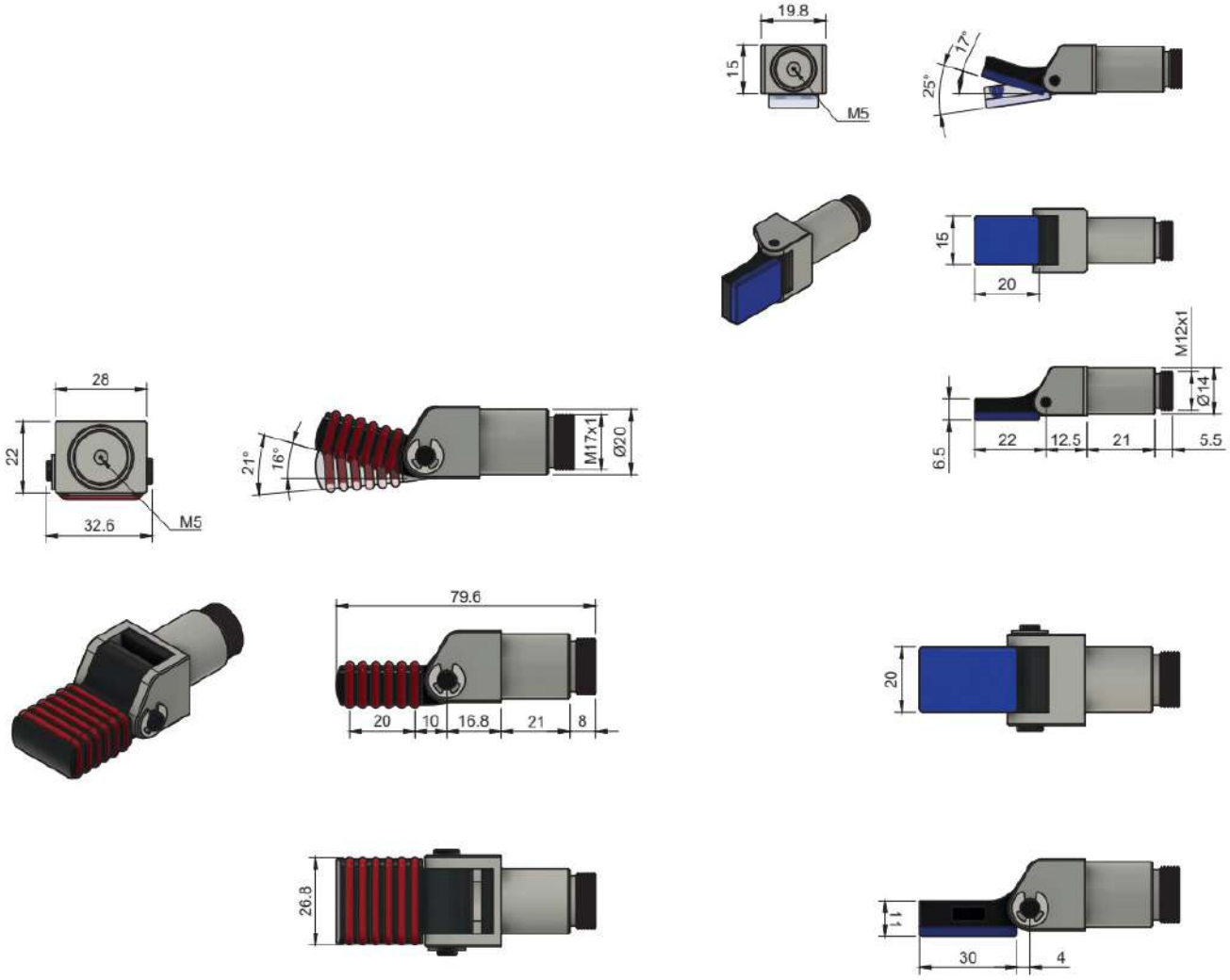

Part No.	Style	Stroke	Max temp of Rings/Pads	Weight (g)
GF.1425.H	HNBR Pads	25°	150°C	17
GF.2021.H	HNBR Pads	21°	150°C	41
GF.2021.N	Nitrile Rings	21°	100°C	45
GF.2021.S	Silicone Rings	21°	200°C	45

Single-acting.
Soft contact HNBR pads or O-rings in Silicone, NBR FDA-H1 food-grade grease.

35° - 90° - 95° FINGER GRIPPER

GF. – Finger Gripper

35° 90° 95° 95° V

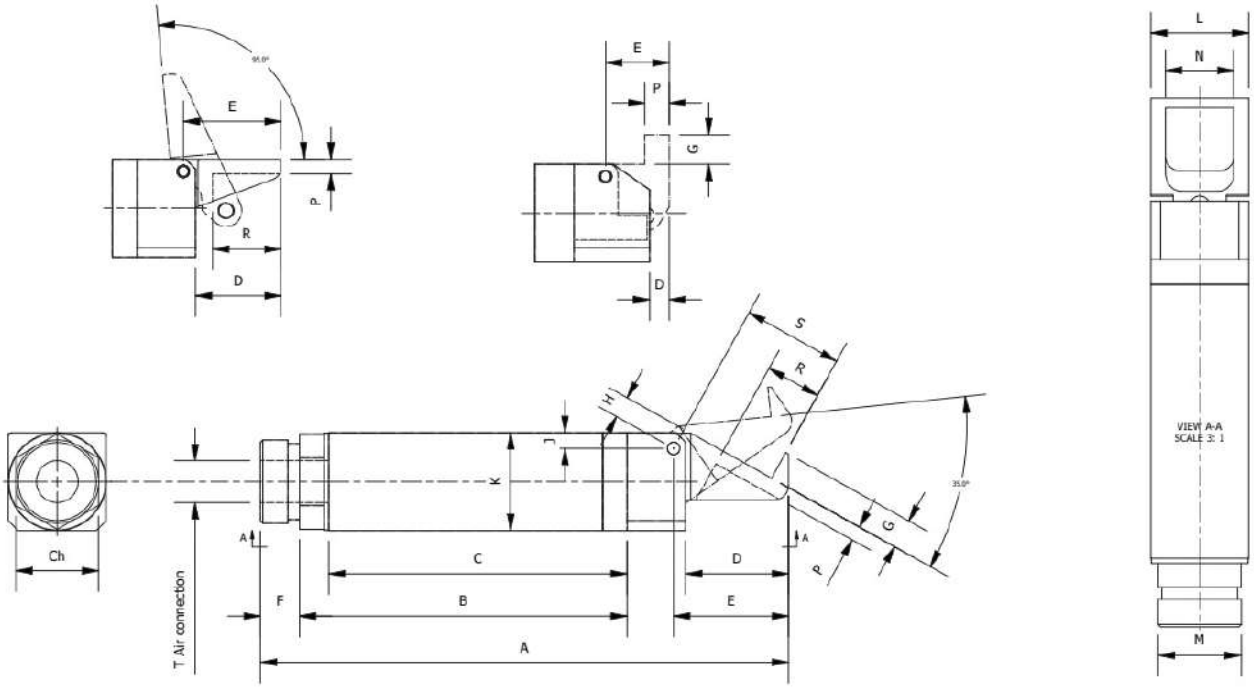

Part No.	Stroke	Grip Force (6 bar)	A	B	C	D	E	F	G	H	J	K	L	M	N	P	R	S	T	CH
GF14-35	35°	26 N	77	47,5	43,5	14	16	5,5	4,5	3,4	2	Ø14	14	M1xX1	10	2	6	13,5	M5	12
GF20-35	35°	100 N	107	66	60	21	23,5	8	6	3,8	2,5	Ø20	20	M17x1	14	3	11,5	20,7	G1/8	17
GF30-35	35°	430 N	156	100	92	30	34	11	8	6	4	Ø30	30	M27x1	22	5	17	30,8	G1/8	27
GF14-90	90°	19 N	69	45,5	41,5	2	8	5,5			2	Ø14	14	M1xX1	10	4			M5	12
GF20-90	90°	70 N	92,5	61	55	2	13	8			2,5	Ø20	20	M17x1	14	5			G1/8	17
GF30-90	90°	300 N	135	91	83	2	20	11			4	Ø30	30	M27x1	22	6			G1/8	27
GF14-95	95°	19 N	75,5	47,5	43,5	12	14	5,5			2	Ø14	14	M1xX1	10	2	9		M5	12
GF20-95	95°	70 N	103,5	66	60	17,5	20	8			2,5	Ø20	20	M17x1	14	3	14		G1/8	17
GF30-95	95°	300 N	148	100	90	25	29	11			4	Ø30	30	M27x1	22	5	21		G1/8	27
GF14-95V	95°	19 N	75,5	47,5	43,5	12	14	5,5			2	Ø14	14	M1xX1	10	2	9		M5	12
GF20-95V	95°	70 N	103,5	66	60	17,5	20	8			2,5	Ø20	20	M17x1	14	3	14		G1/8	17
GF30-95V	95°	300 N	148	100	90	25	29	11			4	Ø30	30	M27x1	22	5	21		G1/8	27

Working Principle: Single acting.
Working pressure: 6 bar clean, dry air.
Material: Silver anodised Aluminium.

GFR-95 – 95° Finger Grippers with Stop

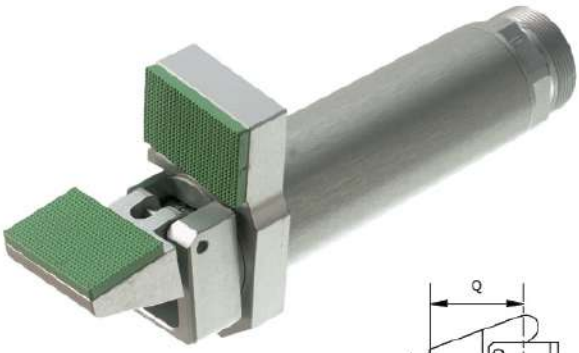

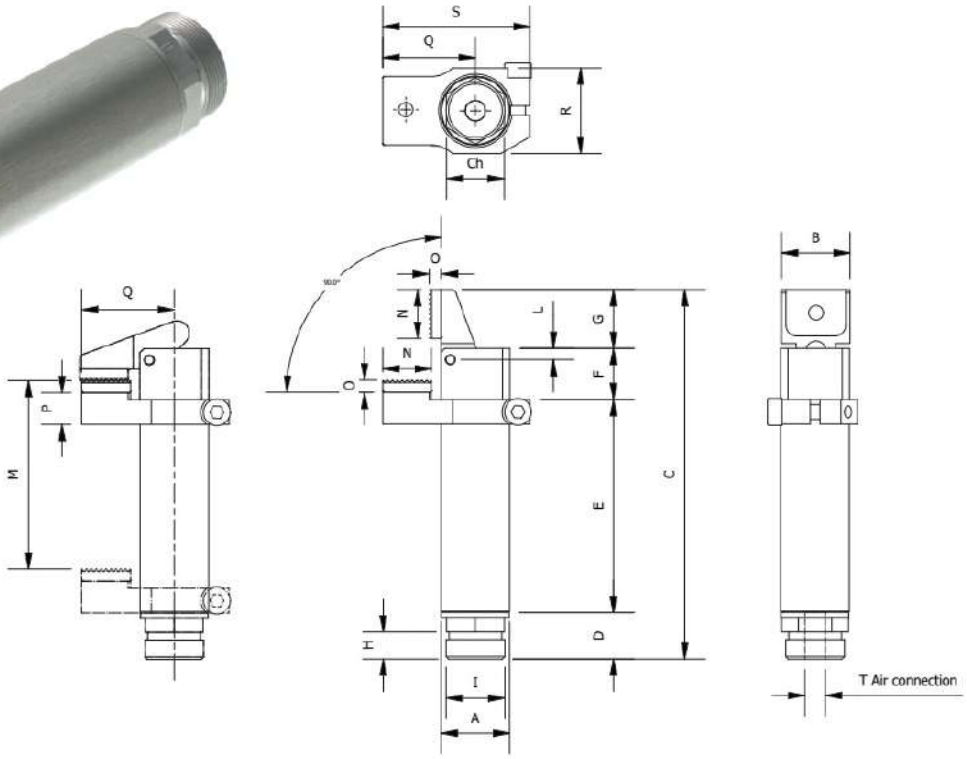

Part No.	Grip force	A	B	C	D	E	F	G	H	I	L	M	N	O	P	Q	R	S	T	CH
GFR1495	19 N	Ø 14	14	75,5	9,5	43,5	10,5	12	5,5	M12X1	2	38,5	10	2,5	6,5	19	17,5	30	M5	12
GFR2095	70 N	Ø 20	20	103,5	14	60	12	17,5	8	M17X1	2,5	52,5	15	2,5	10	27,5	25	43,5	G 1/8	17
GFR3095	300 N	Ø 30	30	148	20	90	15	25	11	M27X1	4	81	20	3	9	40	37	60	G 1/8	27

Work principle: Single acting.
Working pressure: 6 bar clean and dry air.
Material: Silver anodized Aluminium Viton Pads.

95° FINGER GRIPPER

GFRX-95V – 95° Finger Grippers with Stop

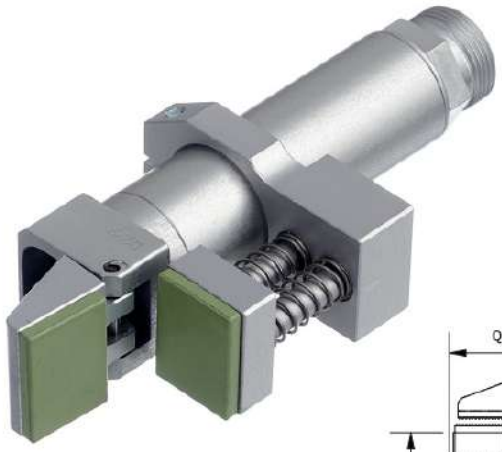

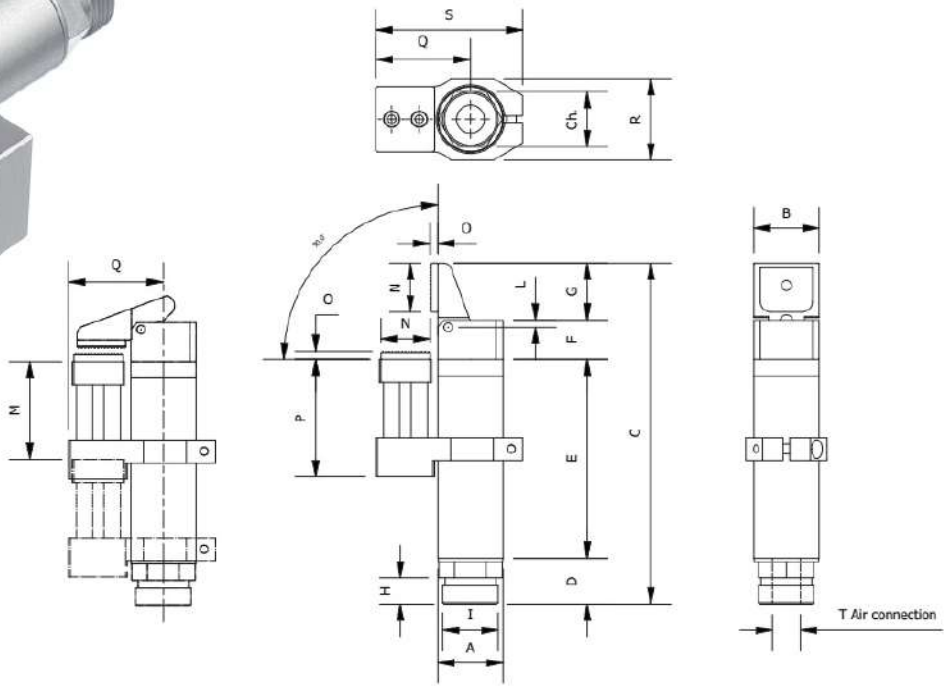

Part No.	Stroke	Grip Force (6 bar)	A	B	C	D	E	F	G	H	I	L	M	N	O	P	Q	R	S	T
GFRX14-95V	95°	19N	Ø14	14	75,5	9,5	43,5	10,5	12	5,5	M12x1	2	16,5	10	2,5	6,5	19	17,5	30	M5
GFRX20-95V	95°	70N	Ø20	20	104.5	14	61	12	17,5	8	M17x1	2,5	41,5	25	2,5	36	29	25	45	G1/8
GFRX30-95V	95°	300N	Ø30	30	148	20	90	15	25	11	M27x1	4	53	20	3	9	40	37	60	G1/8

Working Principle: Single acting.
Working pressure: 6 bar clean, dry air.
Material; Silver anodised Aluminium Viton Pads.

MP.ANS. – Stoppers for Finger Grippers

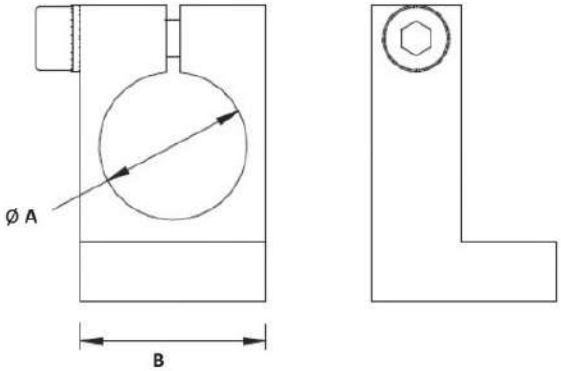

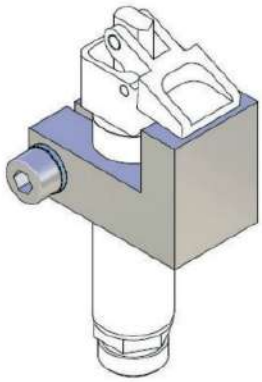

Part No.	A	B	REF	Weight (g)
MP.ANS.14	Ø14	20	GF14..	17
MP.ANS.20	Ø20	25	GF20..	21
MP.ANS.30	Ø30	35	GF30..	30

Material: POM

MP.ZTS. – Finger Gripper Guide

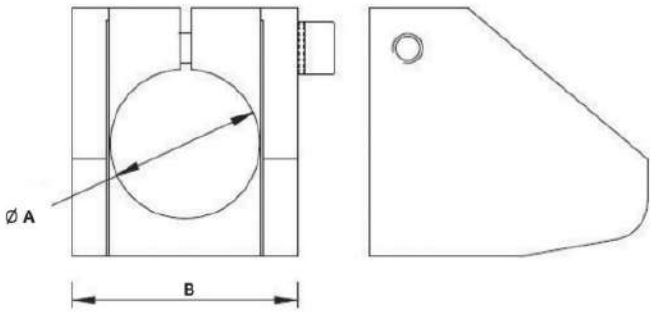

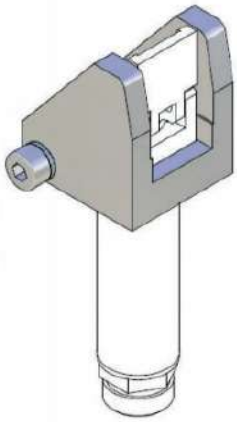

Part No.	A	B	REF	Weight (g)
MP.ZTS.14	Ø14	20	GF14..	15
MP.ZTS.20	Ø20	25	GF20..	20
MP.ZTS.30	Ø30	35	GF30..	60

Material: POM

95° FINGER GRIPPER

MP.ANF. – Stoppers for Finger Grippers with Soft Pad

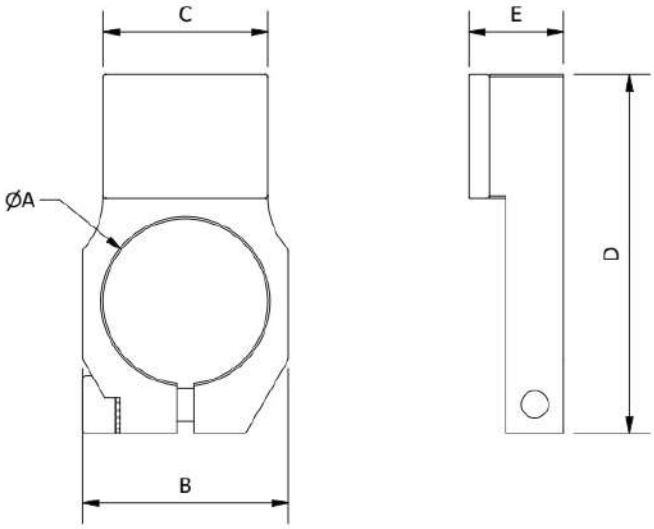

Part No.	A	B	C	D	E	REF	Weight (g)
MP.ANF.14V	Ø14	17.5	14	30.2	9	GF14..	5
MP.ANF.20V	Ø20	25	20	43.5	11.5	GF20..	14
MP.ANF.30V	Ø30	36	30	63	14	GF30..	33

Viton Pad.
Low marking

GFR. – Insert Pad Viton

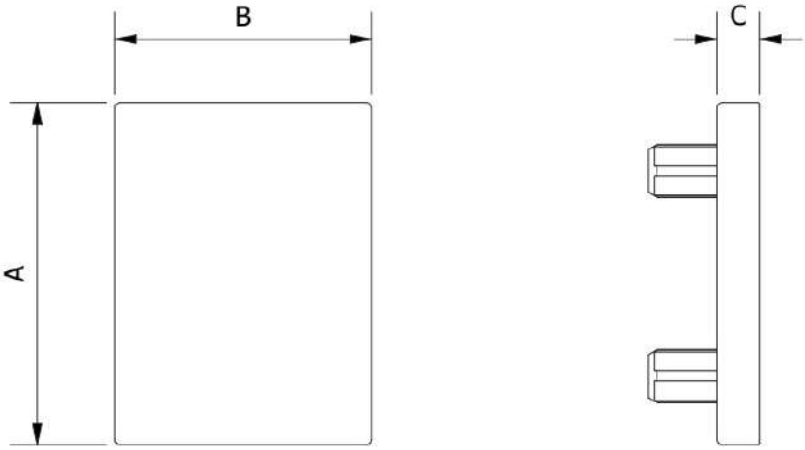

Part No.	A	B	C	REF	Weight (g)
GFR149508V	14	10	2.5	GF14..	1
GFR209508V	20	15	2.5	GF20..	2
GFR309508V	30	20	3	GF30..	3

Low marking.
UV resistant.
Maximum Temp: 210° (<30 sec.).

MP.ANF.VSX – Stoppers for Finger Grippers

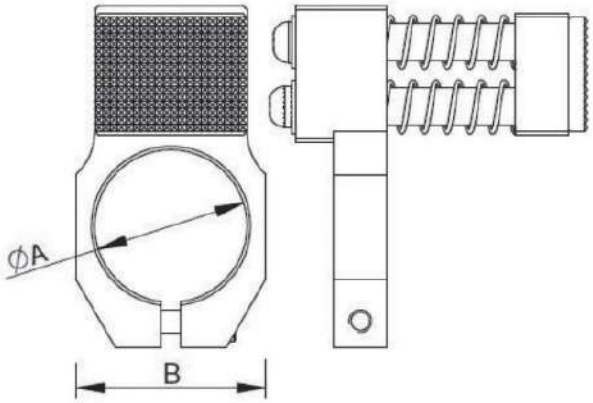

Part No.	A	B	REF	Weight (g)
MP.ANF.14.VSX	Ø14	20	GF14..	15
MP.ANF.20.VSX	Ø20	25	GF20..	20
MP.ANF.30.VSX	Ø30	37	GF30..	50

Viton Pad.
Low marking.

SMB. – Sensor Mounting Brackets

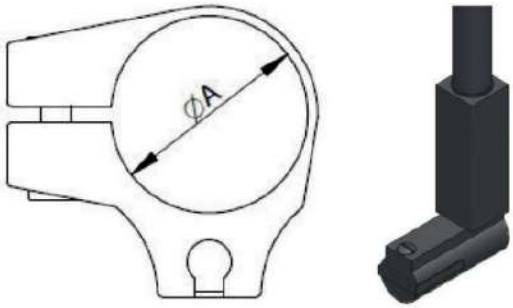

Part No.	A	REF	Sensor	Weight (g)
SMB.14	Ø14	GF14..	SN.K3	
SMB.20	Ø20	GF20..	SN.K3	
SMB.30	Ø30	GF30..	SN.K3	
SMB.14.P	Ø14	GF14..	SN.K3	
SMB.20.P	Ø20	GF20..	SN.K3	
SMB.30.P	Ø30	GF30..	SN.K3	
SMB.14.L	Ø14	GF14..	SN.K3	
SMB.20.L	Ø20	GF20..	SN.K3	
SMB.30.L	Ø30	GF30..	SN.K3	

SN. – Sensor

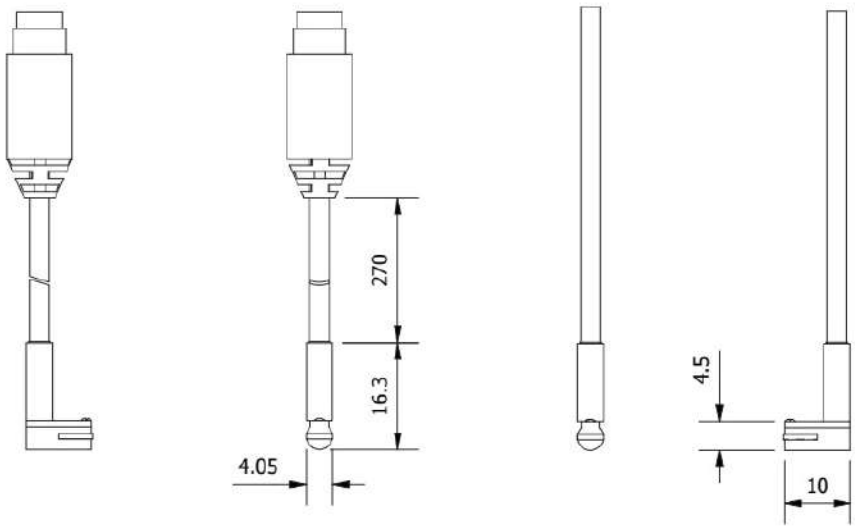

Part No.	Output	Sensor type	Connector	Lead - m	Weight (g)
SN.K3P.M8	PNP	Electronic	M8 3pin	0,3	4
SN.K3N.M8	NPN	Electronic	M8 3pin	0,3	4
SN.K3P.3MW	PNP	Electronic		3	4
SN.K3N.3MW	NPN	Electronic		3	4

GFT. – Pnuematic Tilt Unit

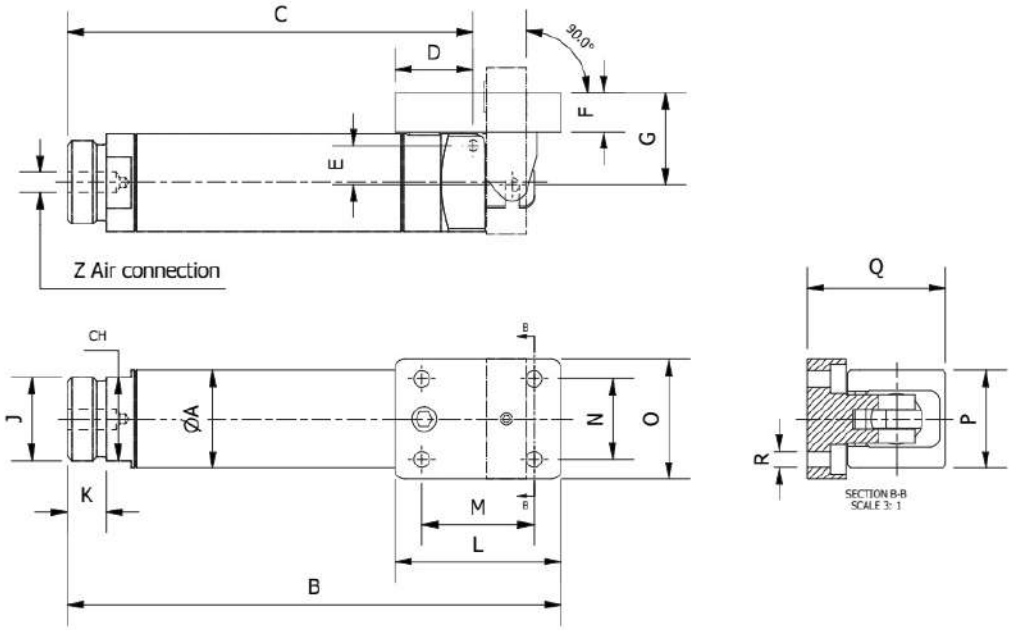

Part No.	A	B	C	D	E	F	G	J	K	L	M	N	O	P	Q	R	CH	Z	Weight (g)
GFT.2090	20	101	83	16	8	8	18.8	M17x1	8	34	23	16.5	24.5	20	28.3	3.3	17	M5	75
GFT.3090	30	146.5	119	21.6	11	10	25.5	M27x1	11	49	25	25	37	30	40.3	5.3	27	G1/8	270

Single-acting.
Tilt angle: 90°.
Pressure range: 2.5-8 bar.

PERPENDICULAR FINGER GRIPPERS

GFP. – Perpendicular Finger Gripper

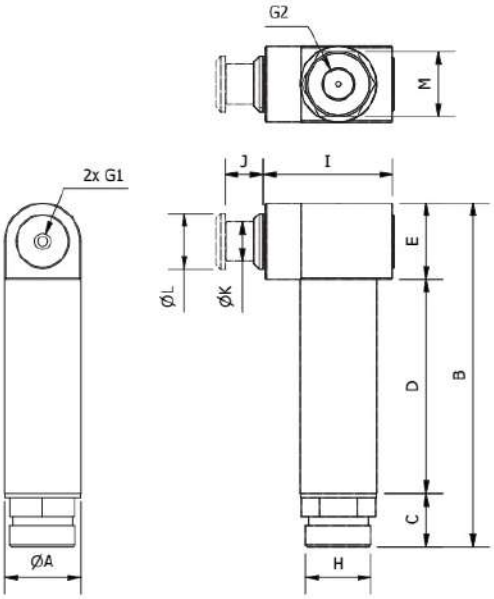

Part No.	A	Stroke	B	C	D	E	G1	G2	H	I	J	K	L	M	Grip force (6 bar0	Weight
GFP.1406	14	6mm	65	9.5	41.5	14	M5	M5	M12X1	31.5	6	8	10	CH12	63N	47
GFP.2010	20	10mm	89.5	14	56	20	M5	G1/8	M17X1	34	10	10.5	14.5	CH17	115N	115
GFP.3015	30	15mm	131	19	82	30	G1/8	G1/8	M27X1	49	15	14	20	CH27	230N	380

Working Principle: Single acting.
Working pressure: 6 bar clean, dry air.
Material; Silver anodised Aluminium.
Through hole for vacuum to a cup.
Viton pad for soft contact.

PAD.V. – Viton Pad for Perpendicular Finger Gripper

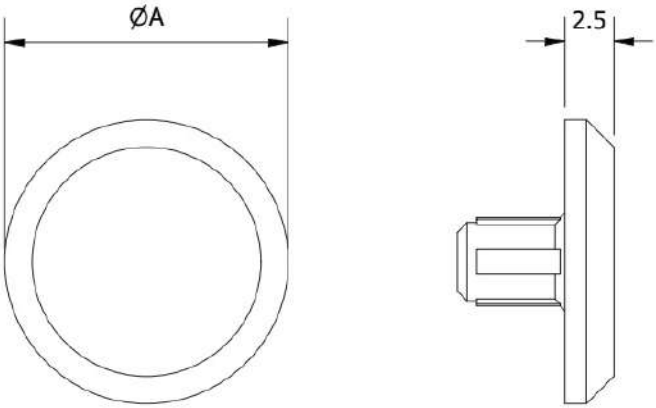

Part No.	A	REF	Weight (g)
PAD.V.D9.5X2.5	10	GPF.1406	1
PAD.V.D14.5X2.5	14,5	GPF.2010	1
PAD.V.D19.5X3.0	20	GPF.3015	4

Viton Pad.
Low marking.

PG. – Parallel Gripper

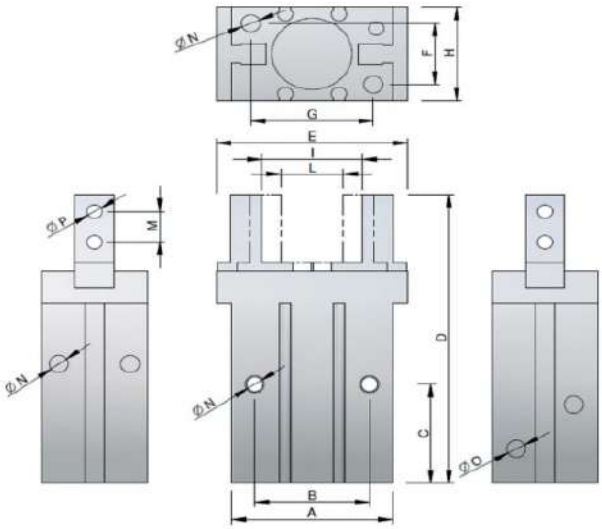

Part No.	Bore Size	A	B	C	D	E	F	G	H	L I open	L closed	Stroke	M	N	O	P	Force (N) Open/Close	Weight (g)
PG-10	10	23	16	23	57	30	12	18	16,5	15,5	11,5	4	5,7	M3	M3	M2.5	22/34	56
PG-10NO	10	23	16	23	57	30	12	18	16,5	15,5	11,5	4	5,7	M3	M3	M2.5	14/	57
PG-10L	10	23	16	25	57	35	12	18	16,5	20,3	11	8	5,7	M3	M3	M2.5	22/34	64
PG-16	16	30,5	24	24,5	67,3	39	15	22	23,5	21	15	6	7	M4	M5	M3	68/90	124
PG-16NO	16	30,5	24	24,5	67,3	39	15	22	23,5	21	15	6	7	M4	M5	M3	54/	125
PG-16L	16	30,5	24	31	70	47	15	22	23,5	28	14,7	12	7	M4	M5	M3	68/90	146
PG-20	20	42	30	29	85	53	18	32	27,5	26,5	16,5	10	9	M5	M5	M4	90/132	236
PG-20NO	20	42	30	29	85	53	18	32	27,5	26,5	16,5	10	9	M5	M5	M4	70/	238
PG-20L	20	42	30	36	90	62	18	32	27,5	33,5	16,1	18	9	M5	M5	M4	84/132	273
PG-25	25	52	36	30	103	71	22	40	33,5	33,5	19,5	14	12	M6	M5	M5	138/204	428
PG-25NO	25	52	36	30	103	71	22	40	33,5	33,5	19,5	14	12	M6	M5	M5	110/	430
PG-25L	25	52	36	40	106	75	22	40	33,5	42,6	19,3	22	12	M6	M5	M5	130/208	489
PG-32	32	60	46	49	113	106	26	46	40	48	26	22	14	M6	M5	M6	320/390	729

GA- – Mounting Bracket for Grippers PG, AG

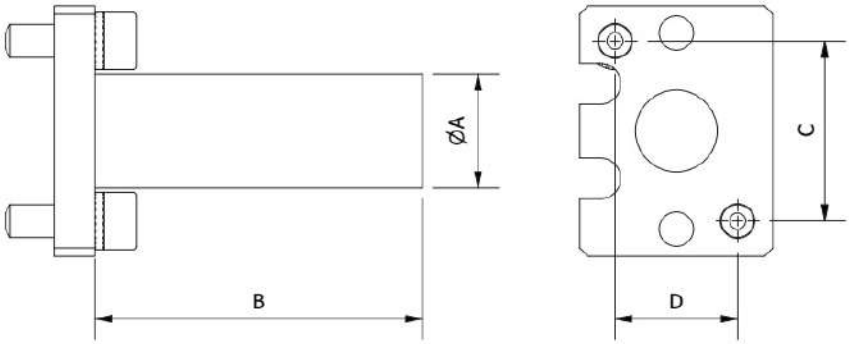

Part No.	A	B	C	D	REF	Weight (g)
GA-10	10	30	18	12	PG-10	11
GA-16	14	40	22	15	PG-16	21
GA-20	20	50	32	18	PG-20	38
GA-25	20	50	40	22	PG-25	55
GA-32	20	50	46	26	PG-32	102

MA.KB. – Jaws for Parallel Gripper PG (complete)

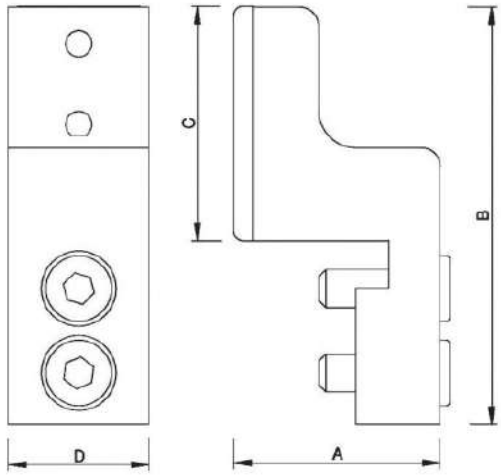

Part No.	Insert	A	B	C	D	Gripper Ref.	Weight (g)
MA.KB.10	FKM-10	15,5	27	14	10	PG-10	14
MA.KB.16	FKM-16	18,5	35	20	15	PG-16	28
MA.KB.20	FKM-20	22	44,5	25	15	PG-20	41
MA.KB.25	FKM-25	29	55	25	20	PG-25	73
MA.KB.32	FKM-32	36	65,5	36,5	25	PG-32	166

Extremely leight weight (Material Aluminium).

FKM – Insert Pad Viton

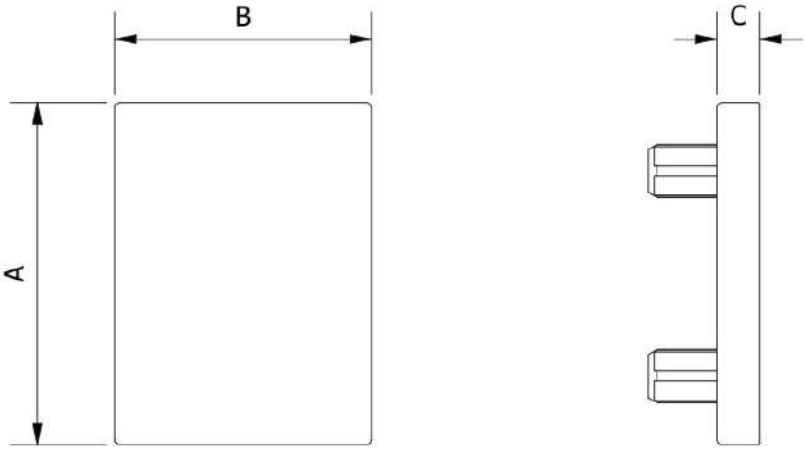

Part No.	Colour	A	B	C	Jaw Ref.	Weight (g)
FKM-10		14	10	2.5	PG-10	1
FKM-16		20	15	2.5	PG-16	2
FKM-20		25	13	2	PG-20	1
FKM-25		25	13	2	PG-25	1
FKM-32		30	20	3	PG-32	3

FKM = Viton (flur=oroelastomer).

AG – Angular Gripper

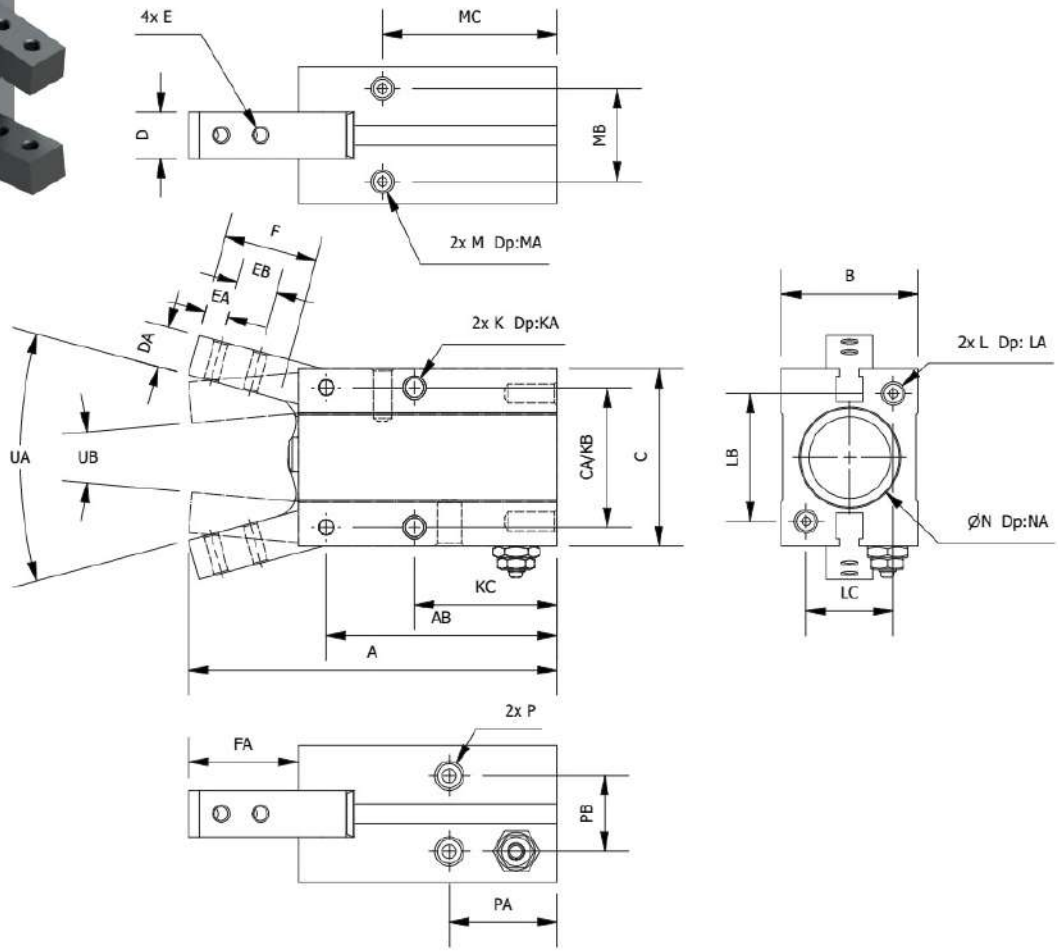

Part No.	Bore Size	A	AB	B	C	CA	D	DA	E	EA	EB	F	FA	K	KA	KB	KC	L
AG-10-D	10	52,5	38,5	16,5	23	14	6,4	4	M2.5	3	5,7	12	14,5	M3x0.5	5	16	23	M3x0.5
AG-16-D	16	62,5	44,5	23,5	30,5	24	8	7	M3	4	7	16	19	M4x0.7	7	24	24,5	M4x0.7
AG-20-D	20	78	55	27,5	42	30	10	8	M4	5	9	20	23,5	M5x0.8	8	30	29	M5x0.8
AG-25-D	25	92	60,5	33,5	52	36	12	10	M5	8	12	27	33	M6x1.0	10	36	30	M6x1.0
AG-32-D	32	96,5	68	440	60	42	18	10	M6	6	14	27	29,5	M6x1.0	10	44	37,5	M6x1.0

Part No.	Bore Size	LA	LB	LC	M	MA	MB	MC	N	NA	P	PA	PB	UA(Open)	UB(Closed)	Weight (g)
AG-10-D	10	6	18	12	M3x0.5	6	11,5	27	11	1,5	M3x0.5	19	10	30°	10°	36
AG-16-D	16	8	22	15	M4x0.7	8	16	30	17	1,5	M5x0.8	10,5	13	30°	10°	59
AG-20-D	20	10	32	18	M5x0.8	10	18,5	35	21	1,5	M5x0.8	22	15	30°	10°	64
AG-25-D	25	12	40	22	M6x1.0	10	22	36,5	26	1,5	M5x0.8	23,5	20	30°	10°	155
AG-32-D	32	12	46	26	M6x1.0	10	26	30	34	2	M5x0.8	31	24	30°	10°	161

SN.DMSG. – Sensor

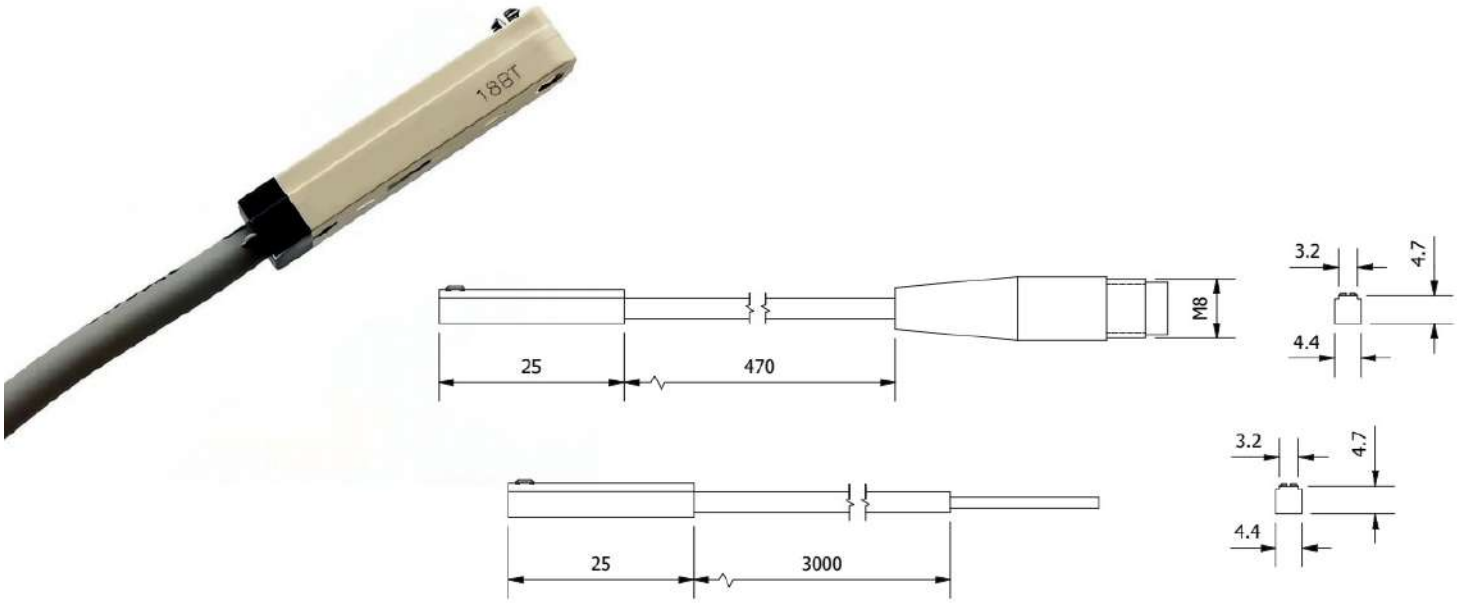

Part No.	Output	Sensor type	Connector	Lead m	REF	Weight (g)
SN.DMSGP.M8	PNP	Magnetic	M8 3pin	0.5	PG/AG/CCTQ/CCAQ	4
SN.DMSGN.M8	NPN	Magnetic	M8 3pin	0.5	PG/AG/CCTQ/CCAQ	4
SN.DMSGP.3M	PNP	Magnetic		3	PG/AG/CCTQ/CCAQ	4
SN.DMSGN.3M	NPN	Magnetic		3	PG/AG/CCTQ/CCAQ	4

SN.DMSH. – Sensor

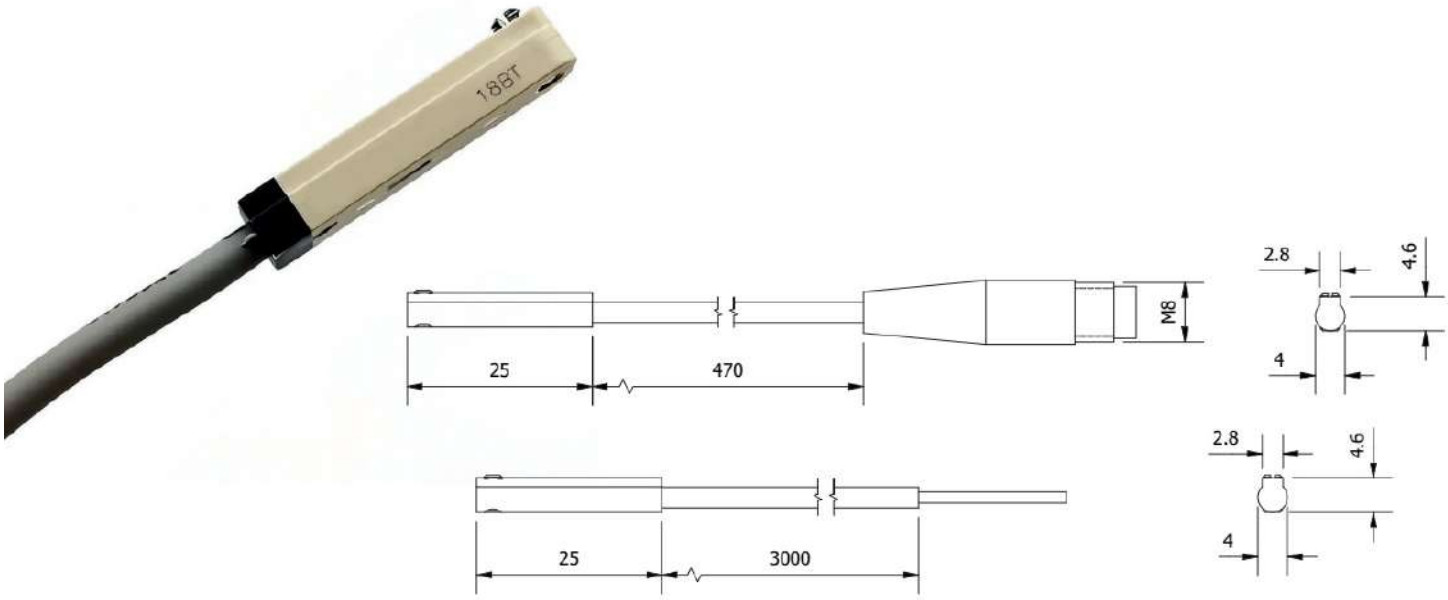

Part No.	Output	Sensor type	Connector	Lead m	REF	Weight (g)
SN.DMSHPM8	PNP	Electronic	M8 3pin	0.5	PG	4
SN.DMSHNM8	NPN	Electronic	M8 3pin	0.5	PG	4
SN.DMSHP3M	PNP	Electronic		3	PG	4
SN.DMSHN3M	NPN	Electronic		3	PG	4

GCLU. – Centering locking unit

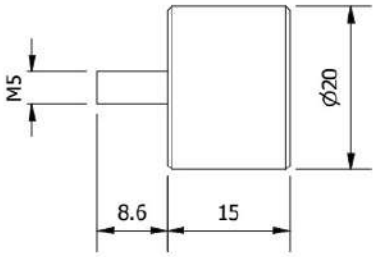

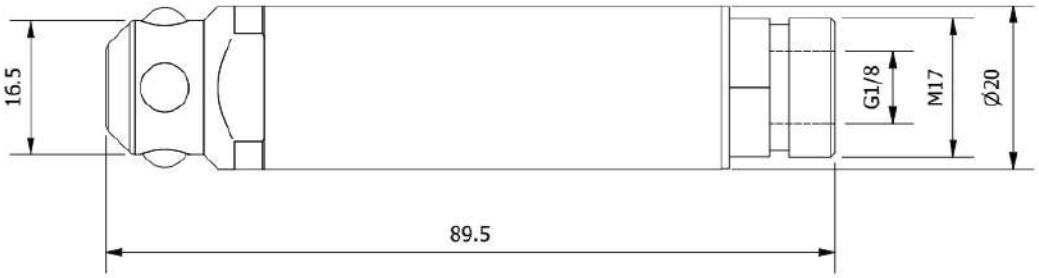

Part No.		Closing force (6 bar)	Weight (g)
GCLU.20.G	Gripper side	750N	93
GCLU.20.M	Mould side		60

Single acting
High gripping force
ISO H7 tolerance is used for positioning

NIPPER BODIES

SPT. – Air Nipper Bodies S - Series

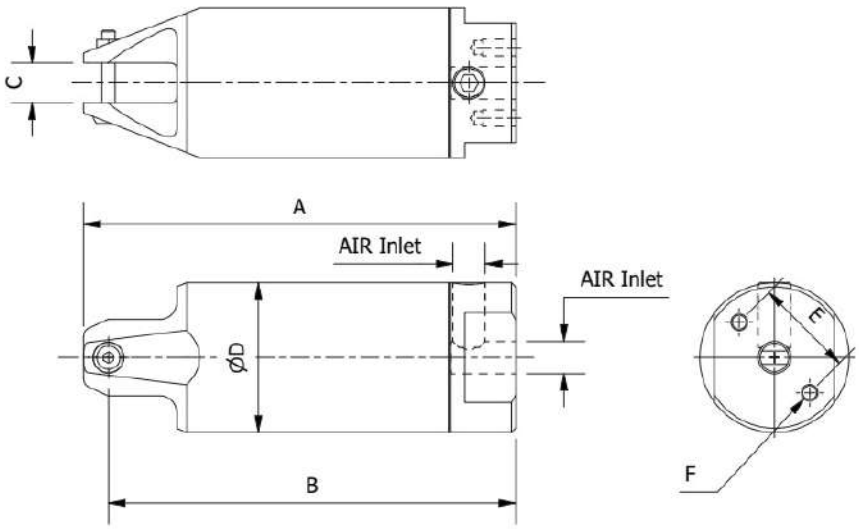

Part No.	Sprue Ø Cut	A	ØD	B	C	E	F	Cutting Pressure	Working Air Pressure	Air Port	Weight (g)
SPT-20R	7mm	130	45	126	12	30	M5x12	140 kg	5-6 Bar	G 1/8"	272
SPT-30R	10mm	166	56	163	17	40	M6x12	280 kg	5-6 Bar	G 1/8"	508

GT – Air Nipper Bodies GT - Series - Round

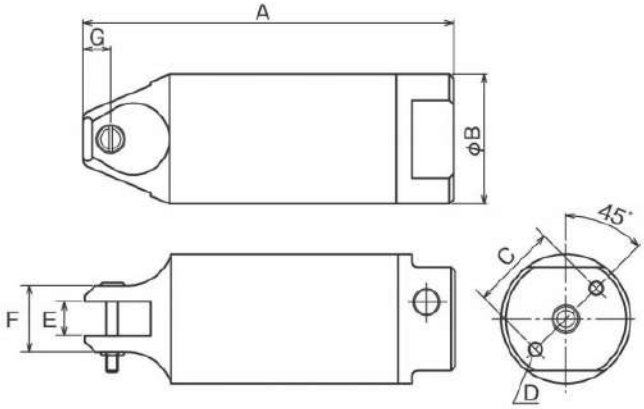

Part No.	Sprue Ø Cut	A	B	C	D	E	F	G	Cuting pressure	Working Pressure	Air Port	Weight (g)
GT-NR5	2mm	94	30	20	M4x10	7	17	7	40Kg	4-5 Bar	R1/8	110
GT-NR10L	4mm	113	36	24	M4x10	12	20	7	60Kg	5-6 Bar	R1/8	215
GT-NR20	7mm	129	45	30	M5x12	12	23	9,5	140Kg	5-6 Bar	R1/8	280
GT-NR30	10mm	165	56	40	M6x12	17	30	10,5	280kg	5-6 Bar	R1/8	505
GT-NR50	12mm	222	75	50	M8x12	25,2	43	15	480Kg	5-6 Bar	R1/4	1190

High quality and reliable performance.
Two air intakes provided.

N.AP – Standard Blades, 15°

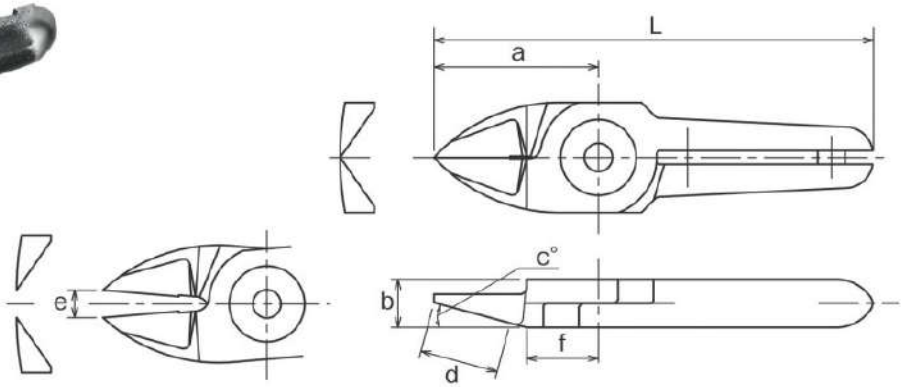

Part No.	a	b	c(°)	d: Effective Length	e: Blade Oppening	f	L	Weight (g)
N5AP	24	7	15	11,5	4	10,5	64	40
N10LAB152	61	12	15	35	10		115	165
N10LAP	35	12	15	16	5	15	89	85
N20AP	35	12	15	16	11	15	95	125
N30AP	66	17	15	38	16	24	150	380

Material: Special Alloy Steel

N.PF – Deep Angle Blades, 30°/40°

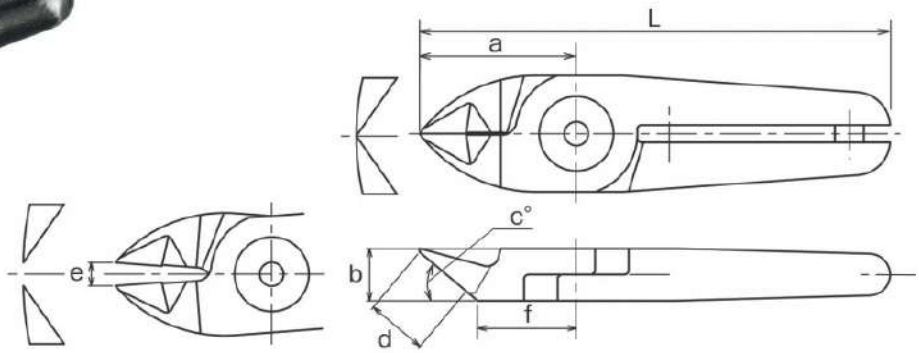

Part No.	a	b	c(°)	d: Effective Length	e: Blade Oppening	f	L	Weight (g)
N10LPF	35	12	40	13,5	5	21	89	120
N20PF	35	12	40	13,5	11	21	95	130
N30PF	58	17	30	25	15	33	142	390
N30AA114	76	17	30	50	20		160	385

Material: Special Alloy Steel

AIR NIPPER BLADES - N SERIES

N.AJ – Straight Blades

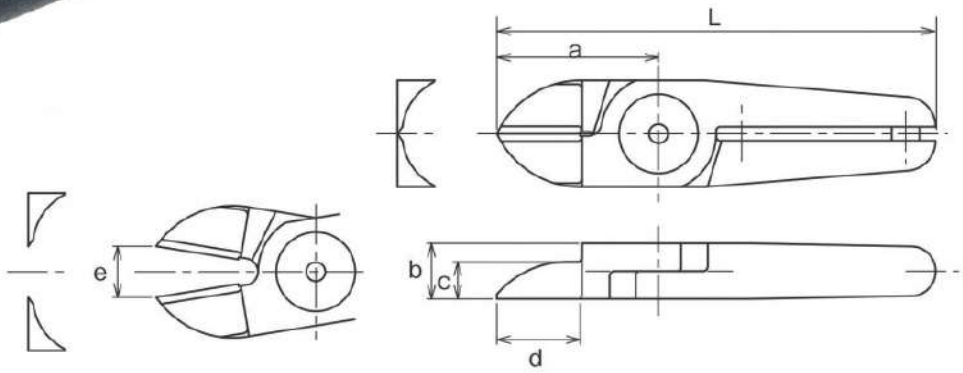

Part No.	a	b	c(°)	d: Effective Length	e: Blade Oppening	L	Weight (g)
N20AJ	35	12	8	18	11	95	125
N30AJ	52	17	8	28	11	136	370

Material: Special Alloy Steel

N.AJL – Long Straight Blades

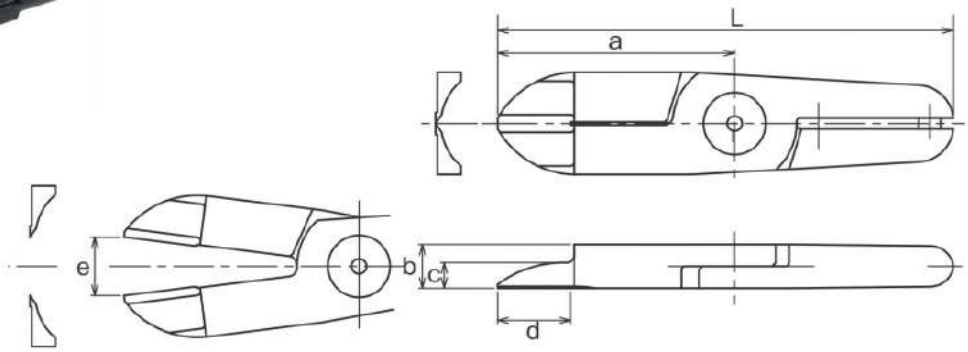

Part No.	a	b	c(°)	d: Effective Length	e: Blade Oppening	L	Weight (g)
N10LAJ	61	12	7	34	10	115	165
N20AJL	65	12	7	20	16	125	230
N30AJL	75	17	8	25	19	159	470

Material: Special Alloy Steel

N.AE – Perpendicular End Cut Blades

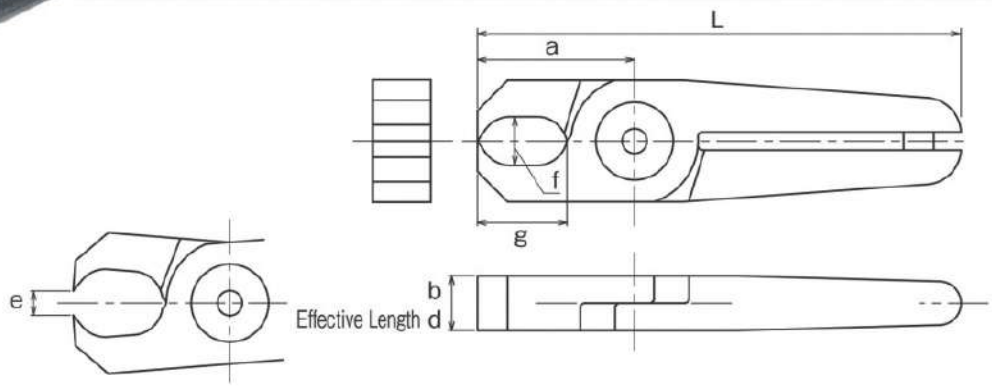

Part No.	a	b	c(°)	d: Effective Length	e: Blade Oppening	L	Weight (g)
N20AE	28	12	10x15.5	12	8	88	135
N30AE	35	17	13x28	17	12	129	395

Material: Special Alloy Steel

N.AH – Offset Blades

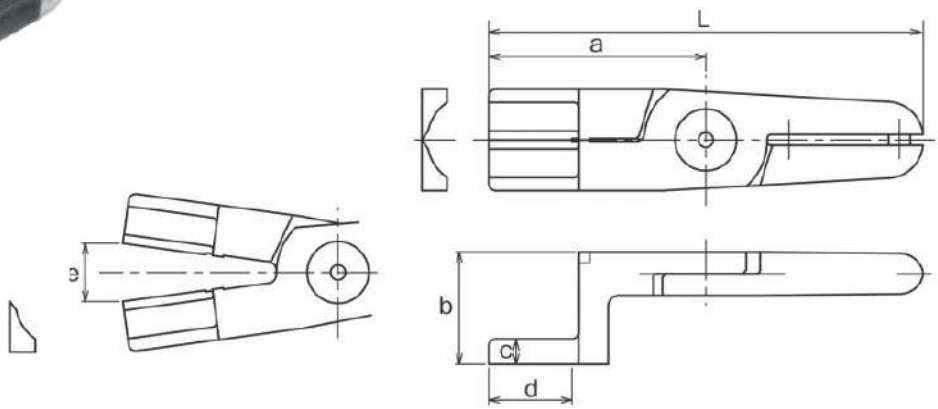

Part No.	a	b	c(°)	d: Effective Length	e: Blade Oppening	L	Weight (g)
N20AH	60	31	7	23	16	120	240

Material: Special Alloy Steel

AIR NIPPER BLADES - N SERIES

N.AL – L Blade

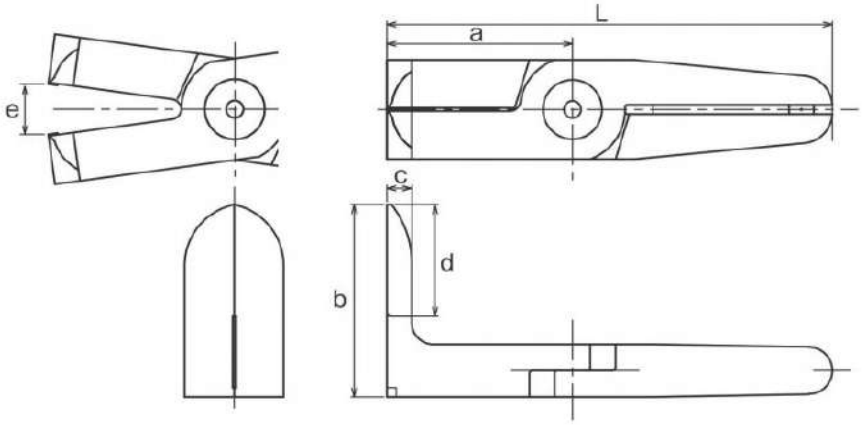

Part No.	a	b	c(°)	d: Effective Length	e: Blade Oppening	L	Weight (g)
N30AL525	60	62		36	16	144	520

Material: Special Alloy Steel

GPT. – Air Nipper Blades - GPT Series

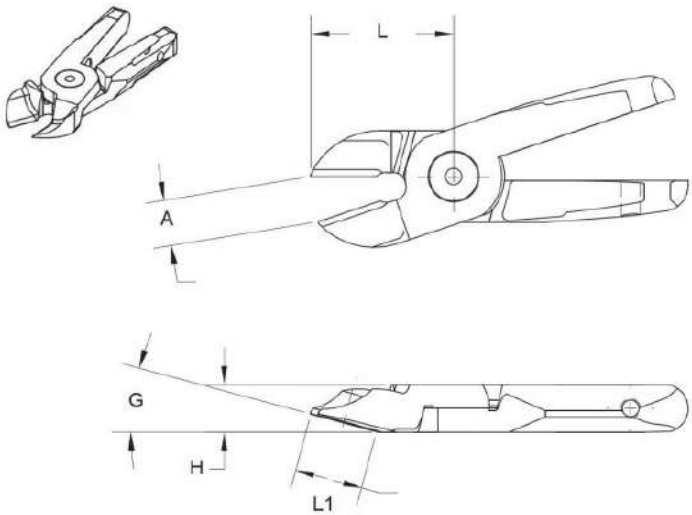

Part No.	Size	A	L	L1	H	G
GPT-20-ST	20	11	36	17	12	15°
GPT-30-ST	30	18	63	36	17	15°

GPT. – Air Nipper Blades - GPT Series

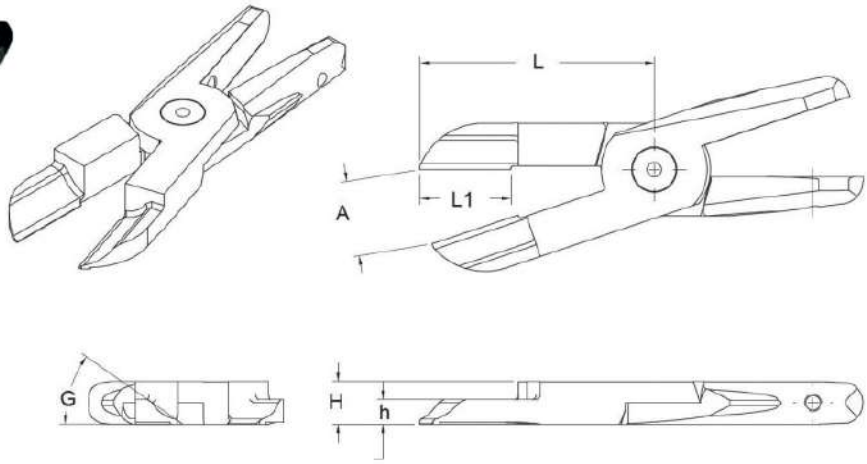

Part No.	Size	A	L	L1	H	h	G
GPT-20-LI	20	21	66	25	12	7	35°
GPT-30-LI	30	22	77	29	17	8	35°

GPT. – Air Nipper Blades - GPT Series

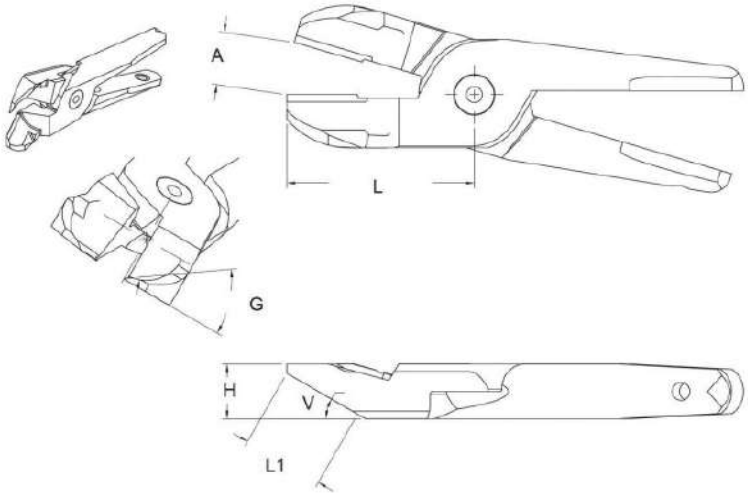

Part No.	Size	A	L	L1	H	V	G
GPT-20-DA	20	11	36	15	12	40°	35°
GPT-30-DA	30	16	58	25	17	30°	35°

GPT. – Air Nipper Blades - GPT Series

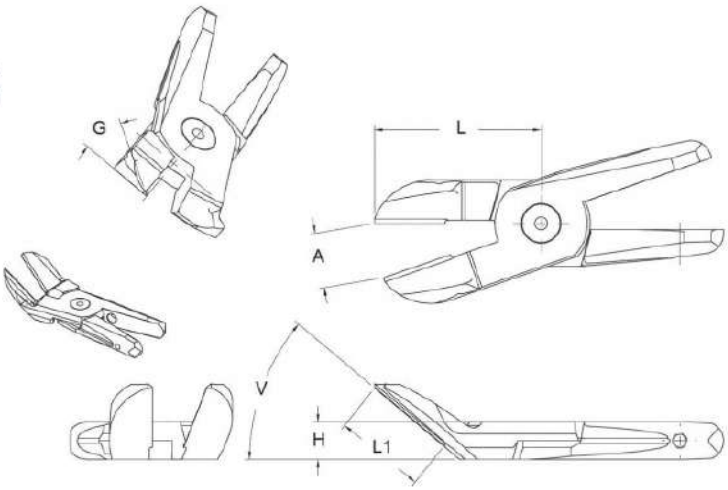

Part No.	Size	A	L	L1	H	V	G
GPT-20-LA	20	17	53	29	12	40°	30°
GPT-30-LA	30	23	83	53	17	30°	30°

GPT. – Air Nipper Blades - GPT Series

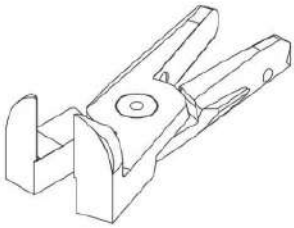

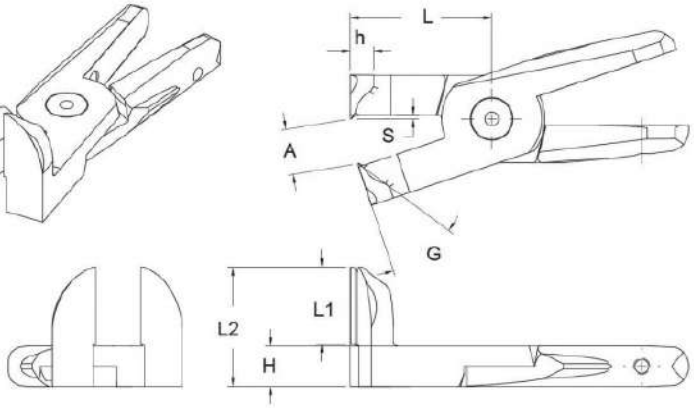

Part No.	Size	A	L	L1	L2	G	H	h	S
GPT-20-DA90	20	13	42	23	35	35°	12	7	1
GPT-30-DA90	30	11	39	33	52	35°	17	8	2

GPT. – Air Nipper Blades - GPT Series

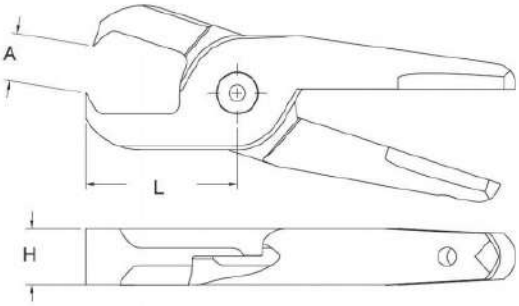

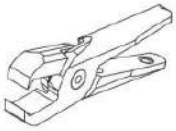

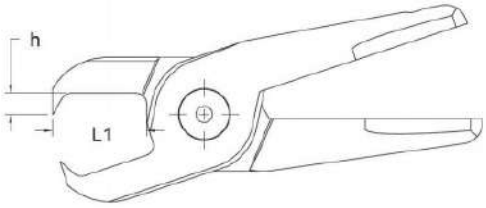

Part No.	Size	A	L	L1	H	h
GPT-20-PE	20	9	28	12	12	4
GPT-30-PE	30	14	46	28	17	6

NIPPER BLADES

GPT. – Air Nipper Blades - GPT Series

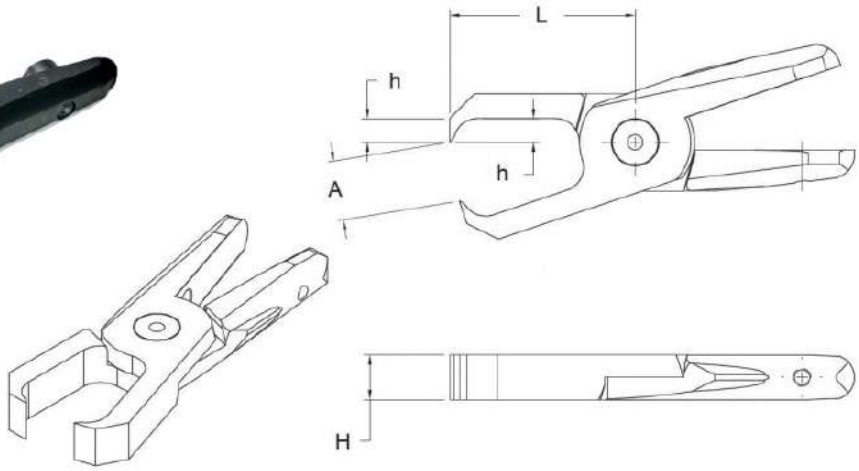

Part No.	Size	A	L	H	h
GPT-20-PELA49	20	16	49	12	6

SCH – Mounting Brackets for Air Nippers

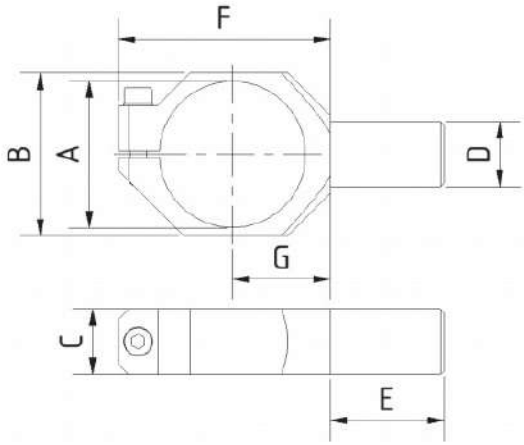

Part No.	A	B	C	D	E	F	G	REF	Weight (g)
SCH-05	30	38	20	20	48	54	25	GT-NR5	91
SCH-10	36	43	20	20	48	60	28	GT-NR10L	95
SCH-20	45	52	20	20	48	68	33	GT-NR20/SPT-20R	102
SCH-30	56	54	20	20	48	80	38	GT-NR30/SPT-30R	117
SCH-50	75	83	30	30	50	96	47	GT-NR50	275

Material: Aluinium
Surface: Silver anodized.

NGC. – Nipper / Gripper Combination Clamp

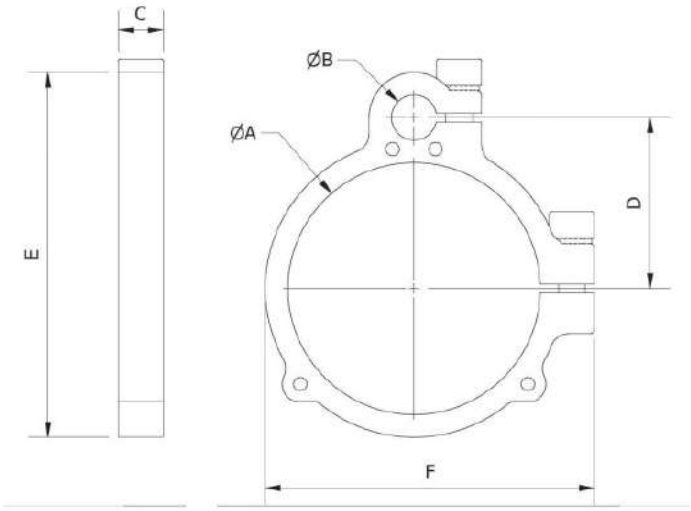

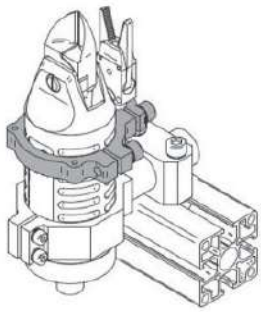

Part No.	A	B	C	D	E	F	REF	Weight (g)
NGC.1010	36	10	10	26	62,8	53	GT-NR10L	27
NGC.2010	45	10	10	32,5	70	62	GT-NR20/SPT-20R	30
NGC.3010	56	10	10	38	81	73	GT-NR30/SPT-30R	43
NGC.5010	75	10	10	47,5	100	92,5	GT-NR50	43

Material: Aluinium.
Surface: Silver anodized.

NSB.A – Swivel Mounting Bracket for Air Nippers - Part A

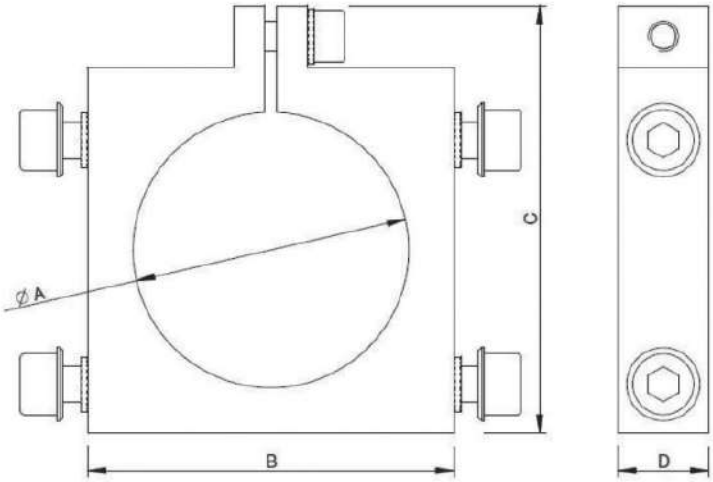

Part No.	A	B	C	D	REF	Weight (g)
NSB.30A	30	45	55	15	GT-NR5	87
NSB.36A	36	50	62	15	GT-NR10L	97
NSB.45A	45	60	70	15	GT-NR20/SPT-20R	115
NSB.56A	56	70	85	15	GT-NR30/SPT-30R	136
NSB.75A	75	90	105	15	GT-NR50	188

Material: Aluinium
Surface: Silver anodized.

NSB.B – Swivel Mounting Bracket for Air Nippers - Part B

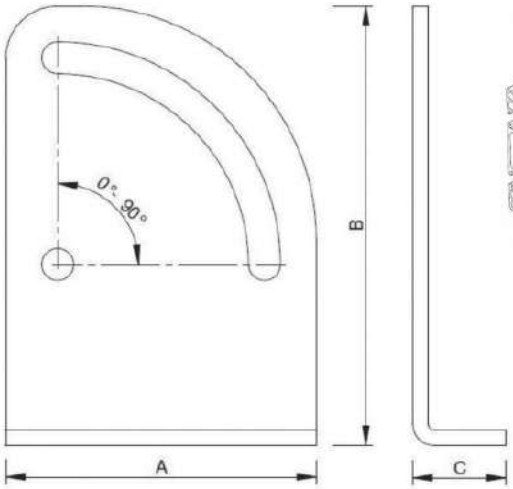

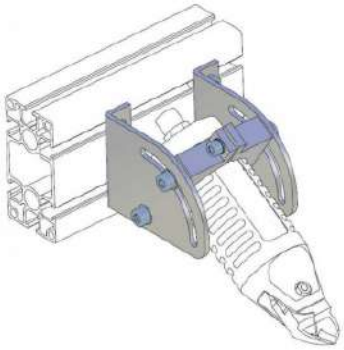

Part No.	A	B	C	REF	Weight (g)	F
NSB.30B	50	75	18	GT-NR5	84	54
NSB.36B	55	80	18	GT-NR10L	100	60
NSB.45B	60	85	18	GT-NR20/SPT-20R	116	68
NSB.56B	65	90	18	GT-NR30/SPT-30R	134	80
NSB.75B	85	122	28	GT-NR50	246	96

Material: Zinc plated steel.

NMBS. – Mounting Brackets Steel for Air Nippers

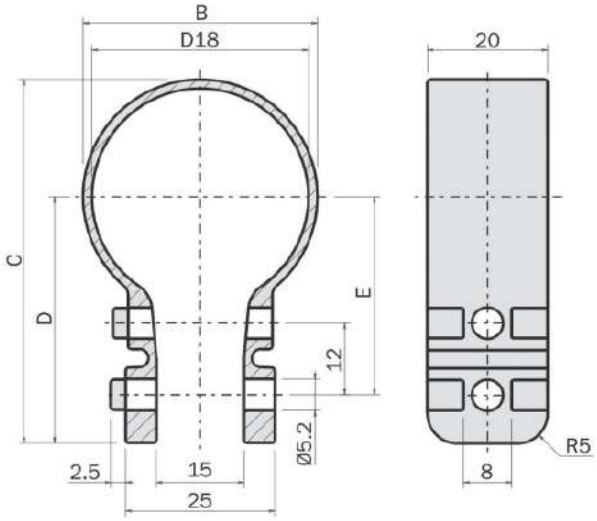

Part No.	D18	B	C	D	E	Weight (g)
NMBS.30	30	33	55	38,5	30,5	69
NMBS.36	36	39	60,5	41	33	75
NMBS.45	45	48	70	46	38	80
NMBS.56	56	60	83,5	53,5	45,5	102

NMS. – Nipper Mounting Bracket Shaft

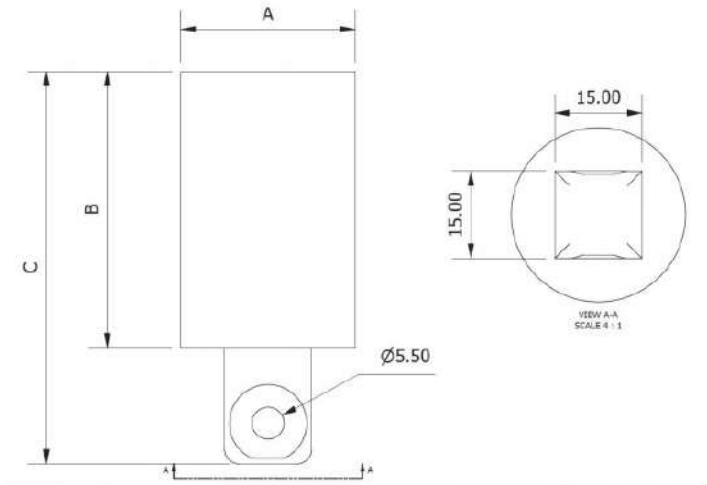

Part No.	A	B	C	Weight (g)
NMS.2048	20	48	67,5	56
NMS.3048	30	48	67,5	82

Material: Aluinium.
Surface: Silver anodized.

CCTQ. – Compact Cylinder, Guide Rod Type

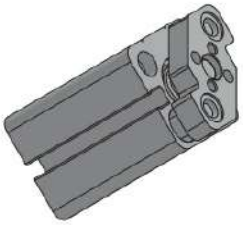

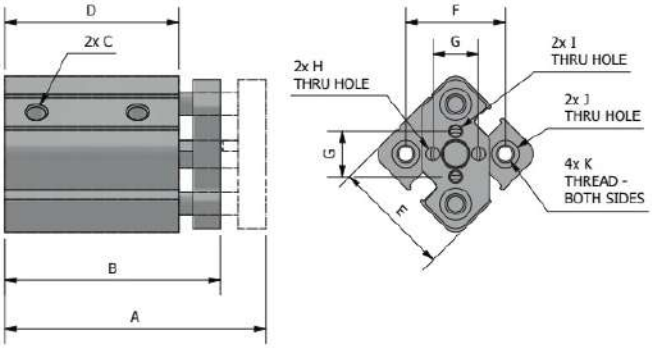

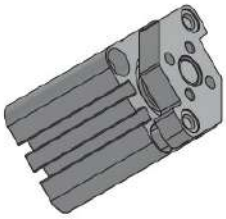

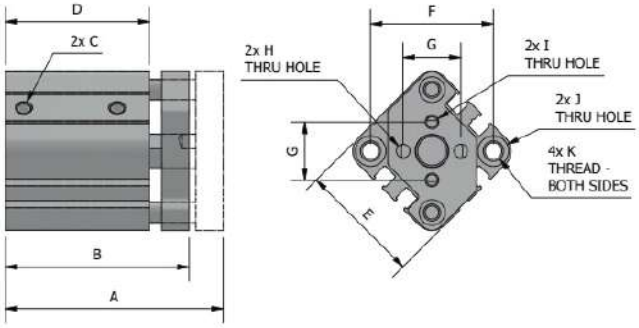

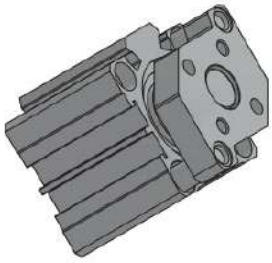

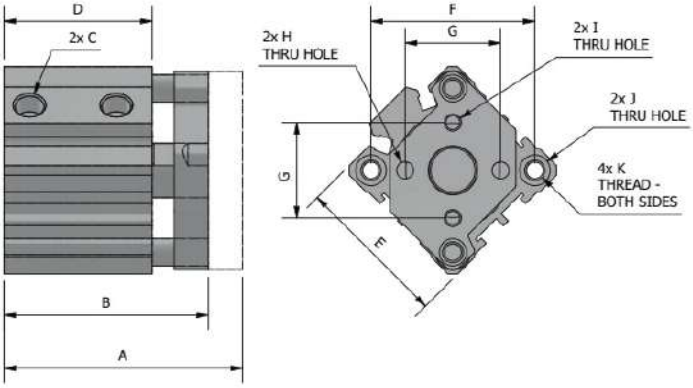

Part No.	Piston bore	Stroke	A	B	C	D	E	F	G	H	I	J	K	Weight (g)
CCTQ.1210	12	10	57,5	47,5	M5X0.8	38,3	26	22	10	M3X0.5	Ø3	Ø3.4	M4X0.7	59
CCTQ.1220	12	20	77,5	57,5	M5X0.8	48,3	26	22	10	M3X0.5	Ø3	Ø3.4	M4X0.7	77
CCTQ.1230	12	30	97,5	67,5	M5X0.8	58,3	26	22	10	M3X0.5	Ø3	Ø3.4	M4X0.7	93
CCTQ.2010	20	10	64	54	M5X0.8	42,5	36	36	17	M4X0.7	Ø4	Ø5.2	M6X1.0	138
CCTQ.2020	20	20	84	64	M5X0.8	52,5	36	36	17	M4X0.7	Ø4	Ø5.2	M6X1.0	168
CCTQ.2030	20	30	104	74	M5X0.8	62,5	36	36	17	M4X0.7	Ø4	Ø5.2	M6X1.0	197
CCTQ.3210	32	10	70	60	G1/8	43,5	45	48	28	M5X0.8	Ø5	Ø5.2	M6X1.0	264
CCTQ.3220	32	20	90	70	G1/8	53,5	45	48	28	M5X0.8	Ø5	Ø5.2	M6X1.0	309
CCTQ.3230	32	30	110	80	G1/8	63,5	45	48	28	M5X0.8	Ø5	Ø5.2	M6X1.0	356

CCAQ. – Compact Cylinder

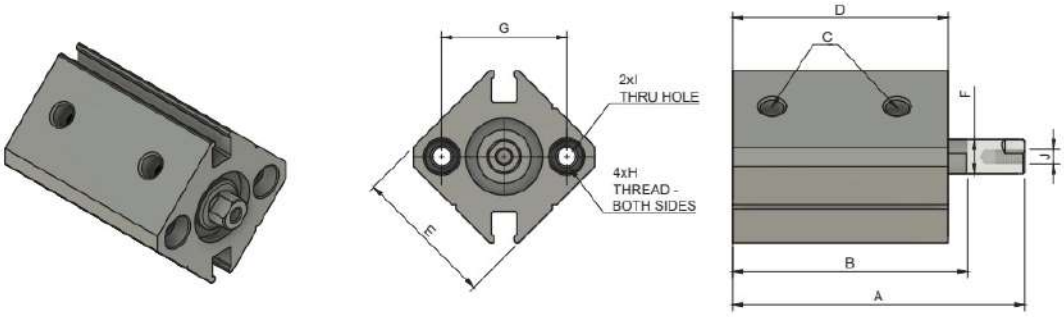

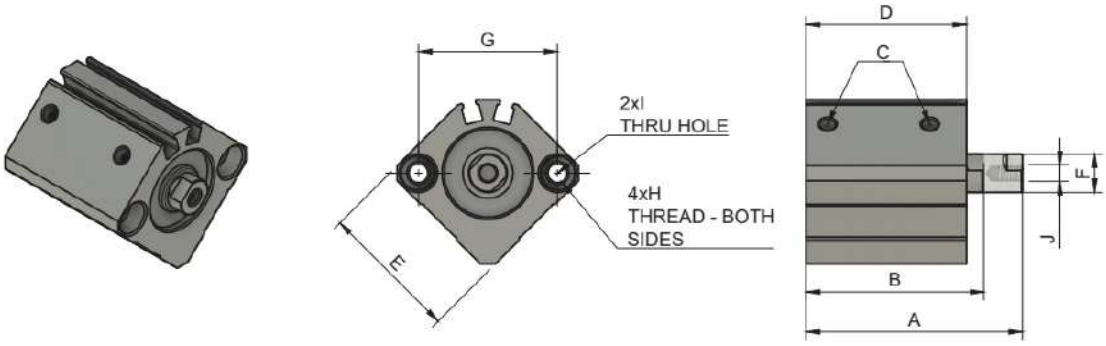

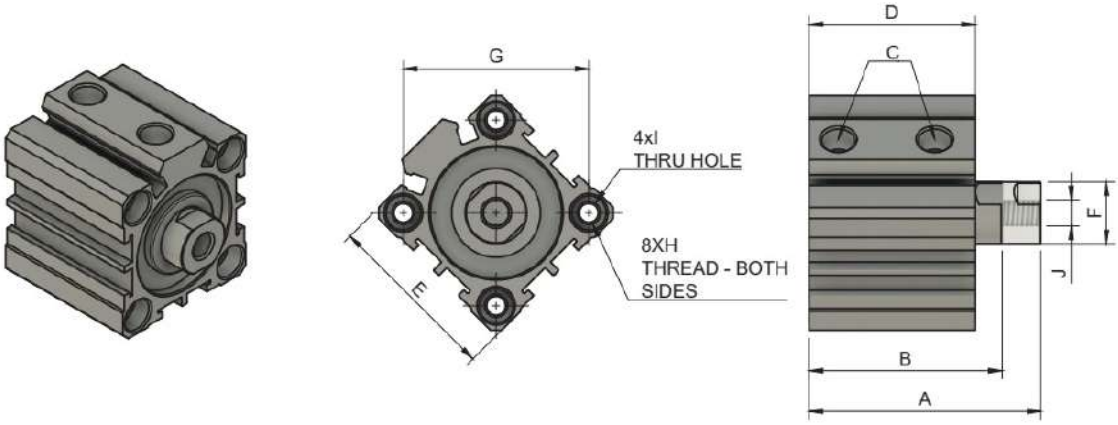

Part No.	Piston bore	Stroke	A	B	C	D	E	F	G	H	I	J	Weight (g)
CCAQ.1210	12	10	51,5	41,5	M5X0.8	38	25	6	22	M4X0.7	Ø3.4	M3X0.5	44
CCAQ.1220	12	20	71,5	51,5	M5X0.8	48	25	6	22	M4X0.7	Ø3.4	M3X0.5	69
CCAQ.1230	12	30	91,5	61,5	M5X0.8	58	25	6	22	M4X0.7	Ø3.4	M3X0.5	81
CCAQ.2010	20	10	56	46	M5X0.8	41,5	36	10	36	M6X1.0	Ø5.2	M5X0.8	106
CCAQ.2020	20	20	76	56	M5X0.8	51,5	36	10	36	M6X1.0	Ø5.2	M5X0.8	138
CCAQ.2030	20	30	96	66	M5X0.8	61,5	36	10	36	M6X1.0	Ø5.2	M5X0.8	158
CCAQ.3210	32	10	60	50	G1/8	43	45	16	48	M6X1.0	Ø5.2	M8X1.25	186
CCAQ.3220	32	20	80	60	G1/8	53	45	16	48	M6X1.0	Ø5.2	M8X1.25	231
CCAQ.3230	32	30	100	70	G1/8	63	45	16	48	M6X1.0	Ø5.2	M8X1.25	281

SN.DMSG. – Sensor

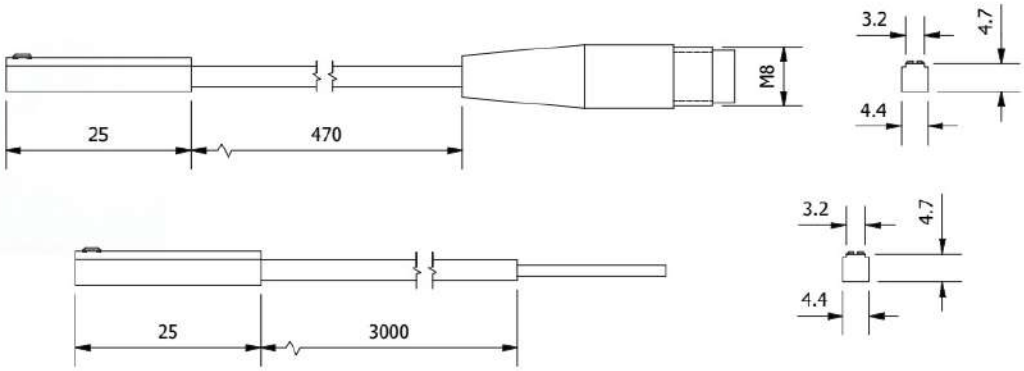

Part No.	Output	Sensor type	Connector	Lead m	REF	Weight (g)
SN.DMSGP.M8	PNP	Magnetic	M8 3pin	0.5	PG/AG/CCTQ/CCAQ	4
SN.DMSGN.M8	NPN	Magnetic	M8 3pin	0.5	PG/AG/CCTQ/CCAQ	4
SN.DMSGP.3M	PNP	Magnetic		3	PG/AG/CCTQ/CCAQ	4
SN.DMSGN.3M	NPN	Magnetic		3	PG/AG/CCTQ/CCAQ	4

MB.CC. – Mounting Bracket for Compact Cylinder

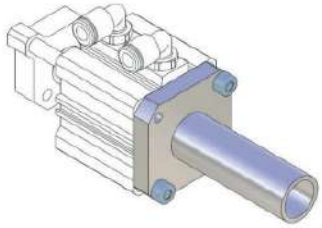

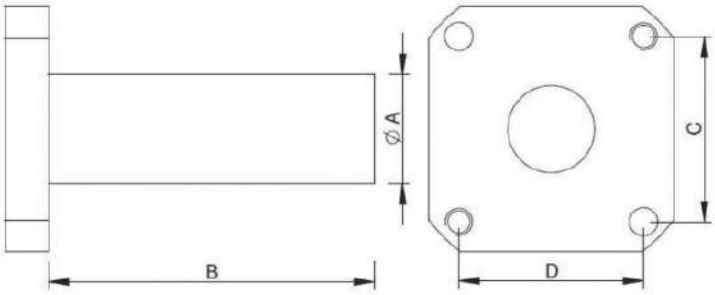

Part No.	A	B	C	D	REF	Weight (g)
MB.CC12.1430	14	30	15,5	15,5	Ø12	19
MB.CC20.1440	14	40	25,5	25,5	Ø20	32
MB.CC32.2060	20	60	34	34	Ø32	55
MB.CC32.2090	20	90	34	34	Ø32	74

Material: Aluinium.
Surface: Silver anodized.
REF: Suitable for cylinders CCAQ and CCTQ.

MB.ZC. – Mounting Bracket for Compact Cylinder

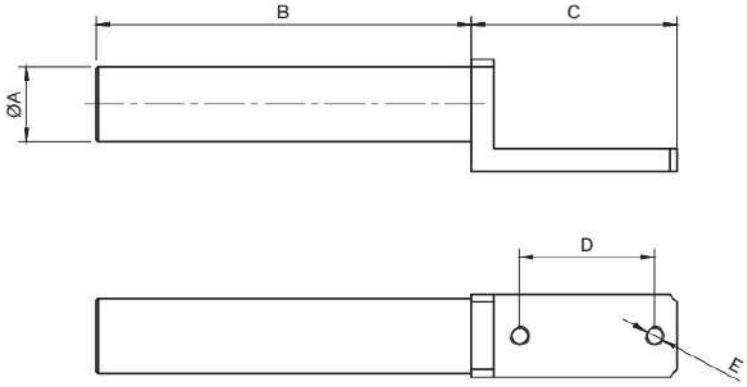

Part No.	A	B	C	D	E	Weight (g)
MB.ZC12.1060	10	60	38	22	M3	14
MB.ZC20.2080	20	100	55	36	M5	55
MB.ZC32.20100	20	100	68	48	M5	58

MCC. – Clamp Brackets for Cylinders

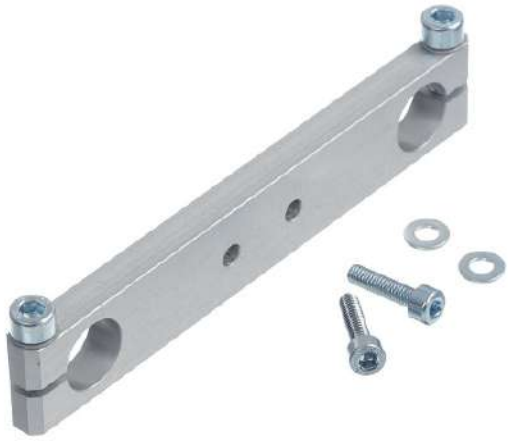

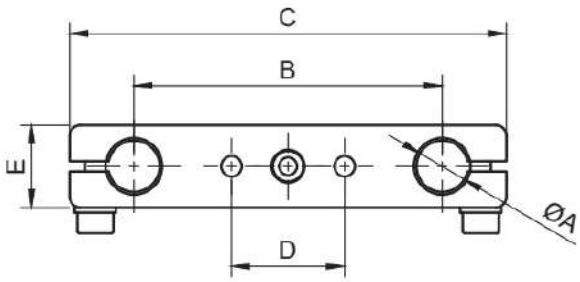

Part No.	A	B	C	D	E	Weight (g)
MCC.12.1060	10	60	85	22	16	29
MCC.20.1480	14	80	140	36	20	67
MCC.32.20120	20	120	160	48	25	135

VCA. – Adapters for Vacuum Cups

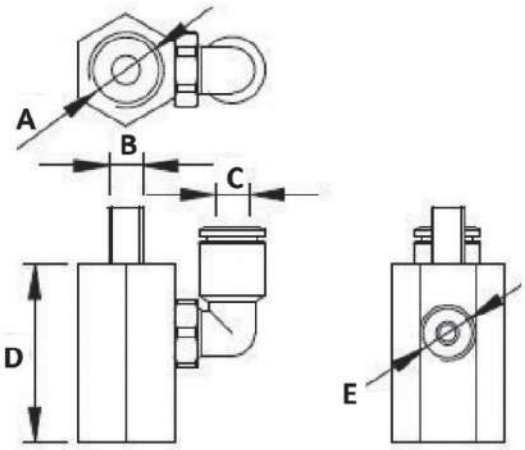

Part No.	A	B	C	D	E	REF	Weight (g)
VCA.M4.18	G1/8	M4	4	24,5	M5	Ø12	13
VCA.M6.18	G1/8	M5	4	24,5	M5	Ø16	15
VCA.M6.14	G1/4	M6	6	31	G1/8	Ø25	24
VCA.M5.18	G1/8	M6	4	34,5	M5	Ø20	21
VCA.M8.14	G1/4	M8	6	31	G1/8	Ø32	22

CPP. – Cylinder Presure Plate

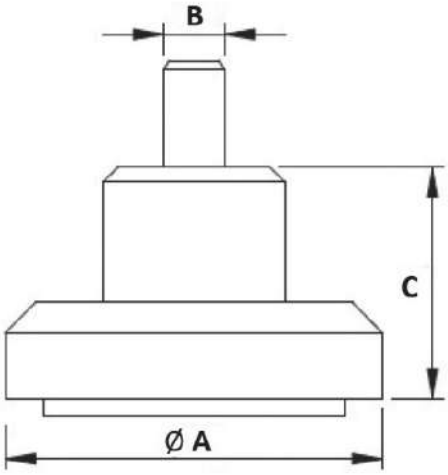

Part No.	A	B	C	REF	Weight (g)
CPP.20.03	20	M3	14	Ø12	5
CPP.25.04	25	M4	15	Ø16	10
CPP.30.05	30	M5	18	Ø20	17
CPP.40.08	40	M8	20	Ø32	46
CPP.40.18	40	G1/8	20		40

Material: Aluinium.
Surface: Silver anodized.

VMB. – Air/Vacuum Manifold 1 - 4

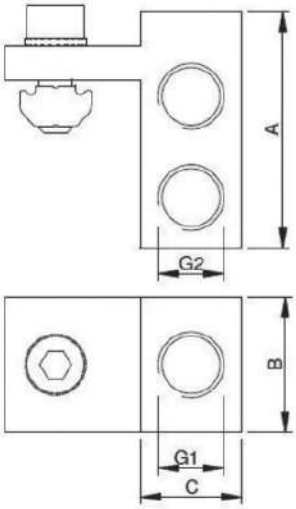

Part No.	A	B	C	G1	G2	REF	Weight (g)
VMB.14.1818.X	35	20	15	G1/8	G1/8	X	35
VMB.14.1818.J	35	20	15	G1/8	G1/8	J	37

Material: Aluinium.
Surface: Silver anodized.

VMB. – Air/Vacuum Manifold 1 - 8

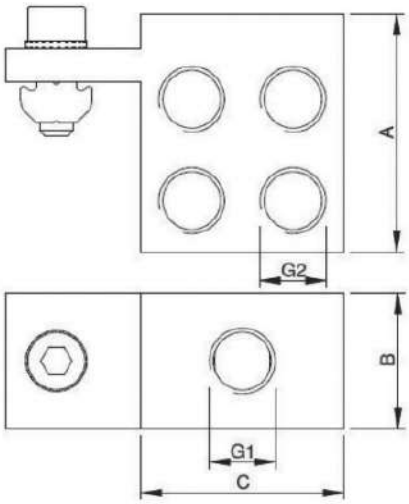

Part No.	A	B	C	G1	G2	REF	Weight (g)
VMB.18.1818.X	35	20	30	G1/8	G1/8	X	55
VMB.18.1818.J	35	20	30	G1/8	G1/8	J	58

VMB. – Air vacuum manifold 2 - 4

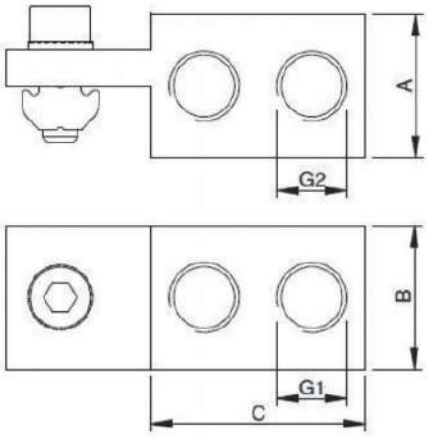

Part No.	A	B	C	G1	G2	REF	Weight (g)
VMB.24.1818.X	20	20	30	G1/8	G1/8	X	39
VMB.24.1818.J	40	20	30	G1/8	G1/8	J	41

VMB. – Air vacuum manifold 2 - 8

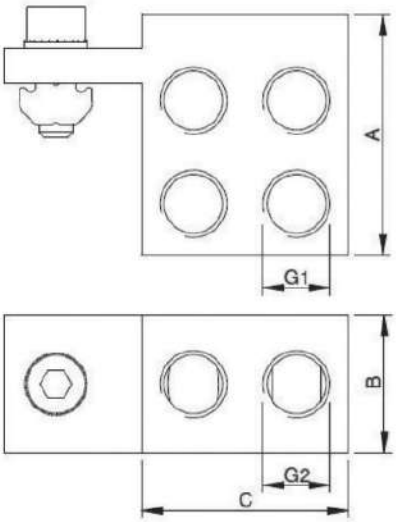

Part No.	A	B	C	G1	G2	REF	Weight (g)
VMB.28.1818.X	35	20	30	G1/8	G1/8	X	54
VMB.28.1818.J	35	20	30	G1/8	G1/8	J	57

VML. – Manidold Block 1 - 4

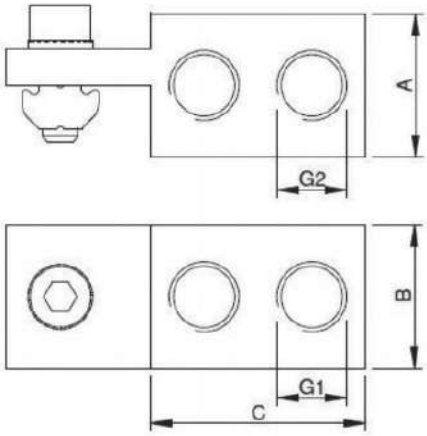

Part No.	A	B	C	REF	Weight (g)
VML.X.14.18	G1/8	30	20	X	60
VML.X.14.14	G1/4	40	20	X	85

MS. – Straight Male Adapter (Parallel)

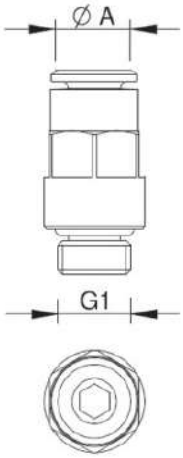

Part No.	Ø A	G1	
MSM04M5	4	M5	10
MSM04G1/8	4	G 1/8	10
MSM06M5	6	M5	10
MSM06G1/8	6	G 1/8	10
MSM06G1/4	6	G 1/4	10
MSM08G1/4	8	G 1/4	10
MSM08G3/8	8	G 3/8	10

Material: Technopolymer / Brass (Nickel Plated).
Pressure: Max 10 bar.
Temperature: 0°C to +60°C.

MS. – Orienting Elbow Male Adapter (Parallel)

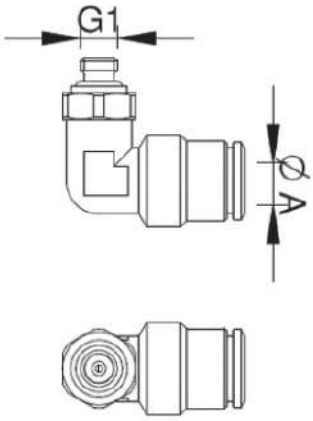

Part No.	Ø A	G1	
MSW04M5	4	M5	10
MSW06M5	6	M5	10
MSW06G1/8	6	G 1/8	10
MSW08G1/4	8	G 1/4	10

MS. – Y Connector

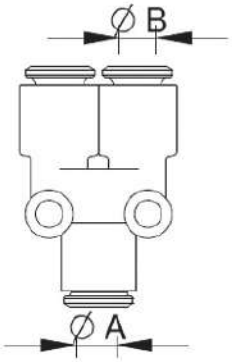

Part No.	Ø A	Ø B	
MSY04	4	4	10
MSY06	6	6	10
MSY08	8	8	10

MS. – Y Connector

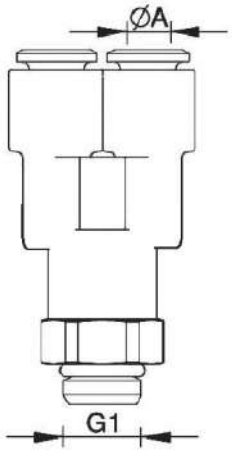

Part No.	Ø A	G1	
MSTY04G1/8	4	G 1/8	10
MSTY06G1/8	6	G 1/8	10
MSTY08G1/4	8	G1/4	10

MS. – Orienting Tee male adapter (parallel) – centre leg

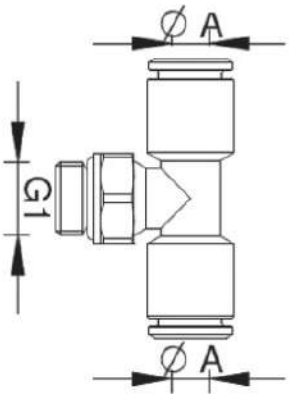

Part No.	Ø A	G1	
MSA04M5	4	M5	10
MSA04G1/8	4	G 1/8	10
MSA06M5	6	M5	10
MSA06G1/8	6	G 1/8	10
MSA08G1/4	8	G 1/4	10

MS. – Tee Connector

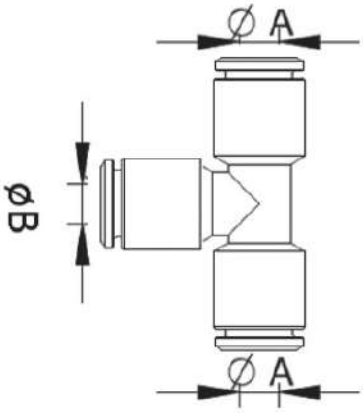

Part No.	Ø A	Ø B	
MST04	4	4	10
MST06	6	6	10
MST08	8	8	10

TUBE

PPU. – Hoses

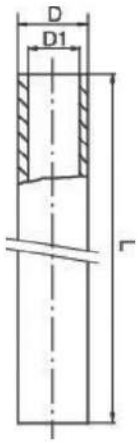

Part No.	D (mm)	D1 (mm)	Working pressure	Bend radius	Coil Length L
PPU4B	4	2,5	Max 10 bar	20 mm.	30 m.
PPU6B	6	4	Max 10 bar	30 mm.	30 m.
PPU8B	8	6	Max 10 bar	31 mm.	30 m.

CB. – M8 Screw-on Cable Connectors

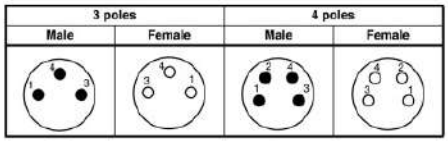

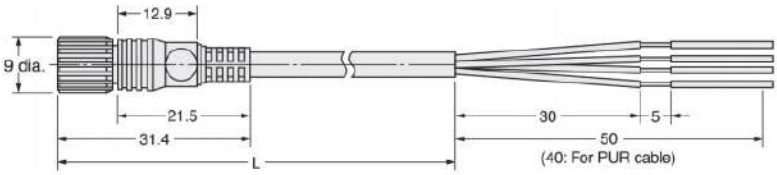

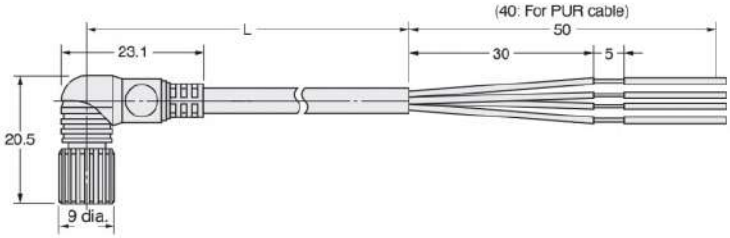

Part No.	Connector Type	Size	No. of Cable Cores.	Cable Length
CB.XS3F.M83S5M	Straight	M8	3 - wire	5
CB.XS3F.M83E5M	Elbow	M8	3 - wire	5
CB.XS3F.M84S5M	Straight	M8	4 - wire	5
CB.XS3F.M84E5M	Elbow	M8	4 - wire	5

SN. – Sensor for GZ12-10, GZ.AA, GZ.2016, CC.

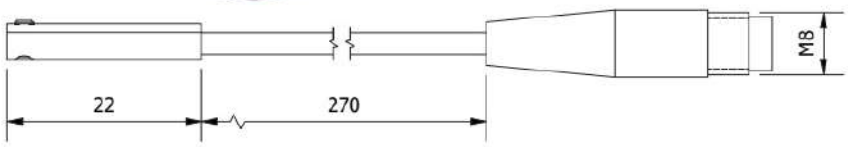

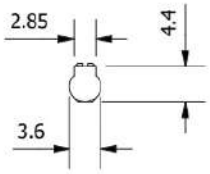

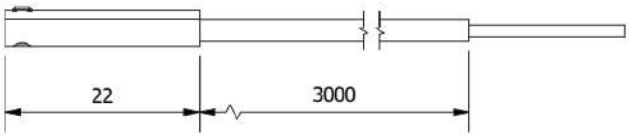

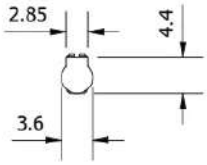

Part No.	Output	Sensor type	Connector	Lead - m	Weight (g)
SN.K5P.M8	PNP	Electronic	M8 3pin	0,3	4
SN.K5N.M8	NPN	Electronic	M8 3pin	0,3	4
SN.K5P.3MW	PNP	Electronic		3	4
SN.K5N.3MW	NPN	Electronic		3	4

SN. – Sensor for GF.

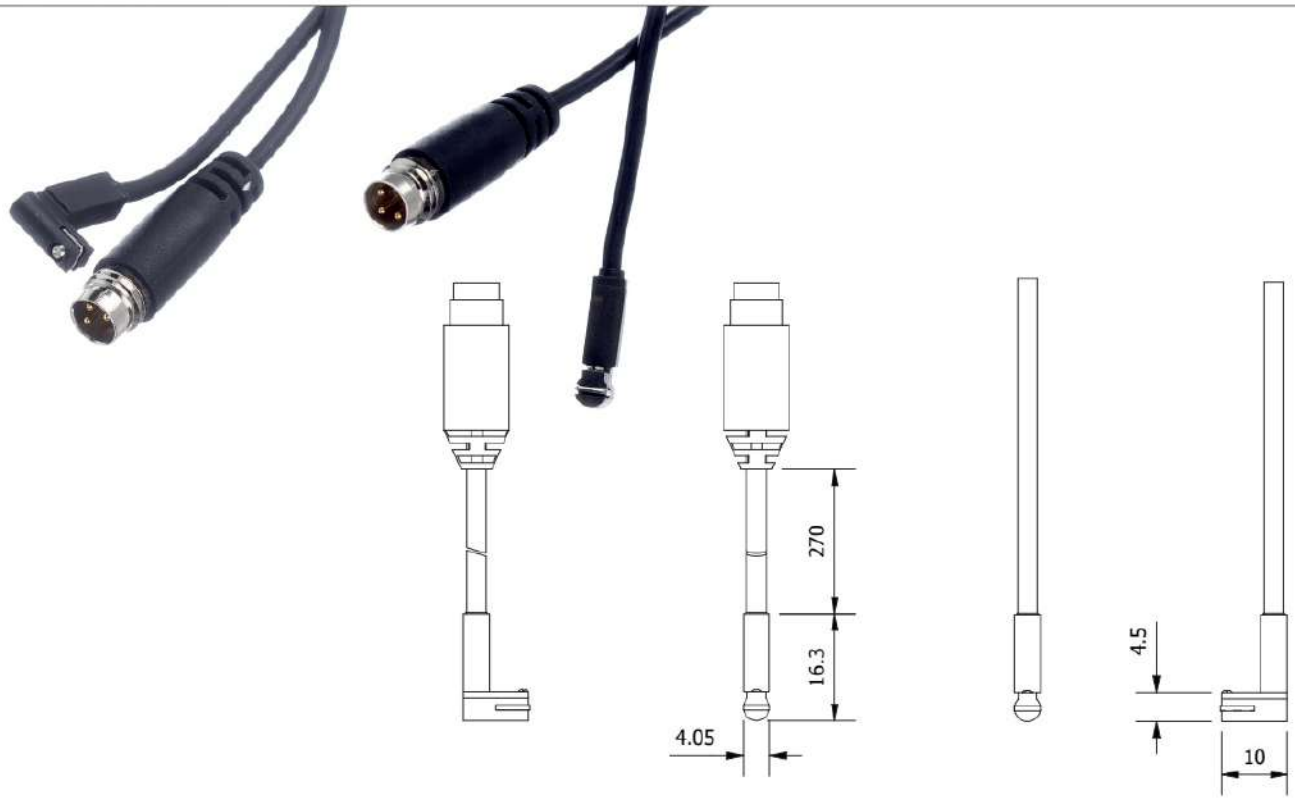

Part No.	Output	Sensor type	Connector	Lead - m	Weight (g)
SN.K3P.M8	PNP	Electronic	M8 3pin	0,3	4
SN.K3N.M8	NPN	Electronic	M8 3pin	0,3	4
SN.K3P.3MW	PNP	Electronic		3	4
SN.K3N.3MW	NPN	Electronic		3	4

GZ20. – Sensor for GZ20.

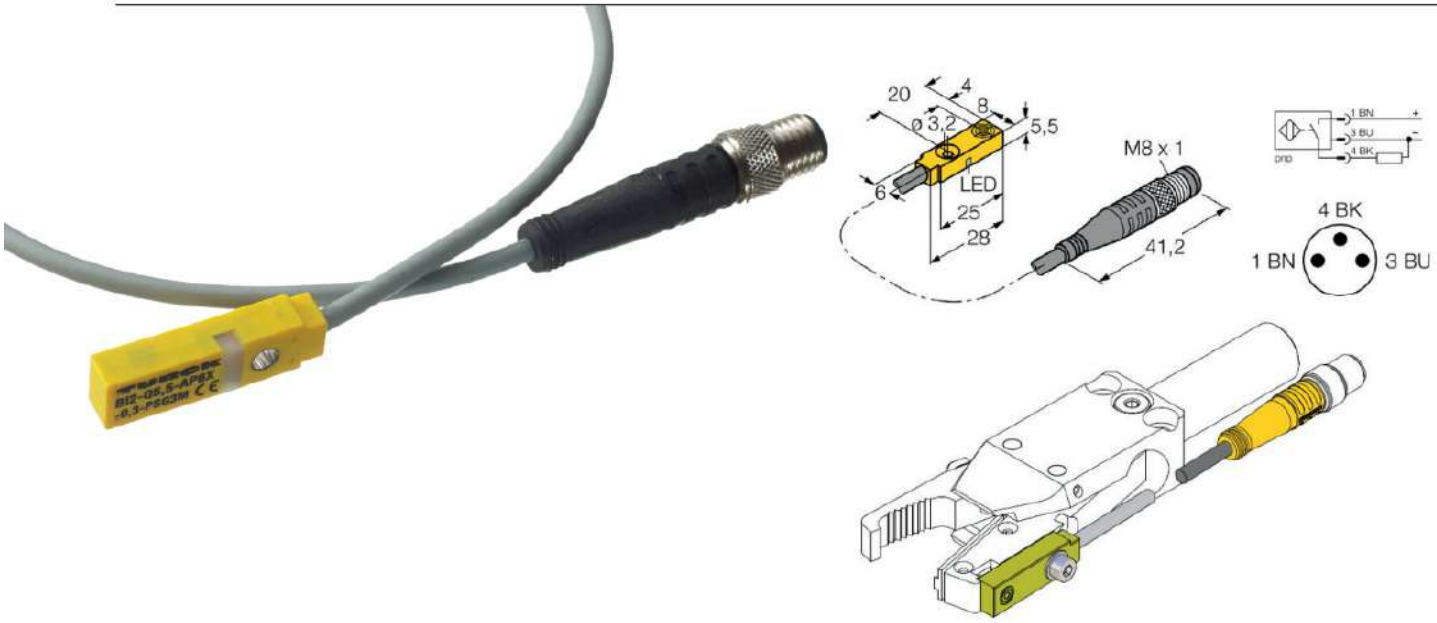

Part No.	Type	Cable length	Connection
GZ20.SM8.PNP	PNP	300	M8
GZ20.SM8.NPN	NPN	300	M8

GZ-SCP – Sensor for GZ-10-8, 12-10

Part No.	Output	Sensor Type	Sensing Distance	Connector	Weight (g)
GZ-SCP-10-8	PNP	Magnetic	0-50mm	M8 4pin	65
GZ-SCP-12-10	PNP	Magnetic	0-50mm	M8 4pin	65

SN.DMSH –Sensors

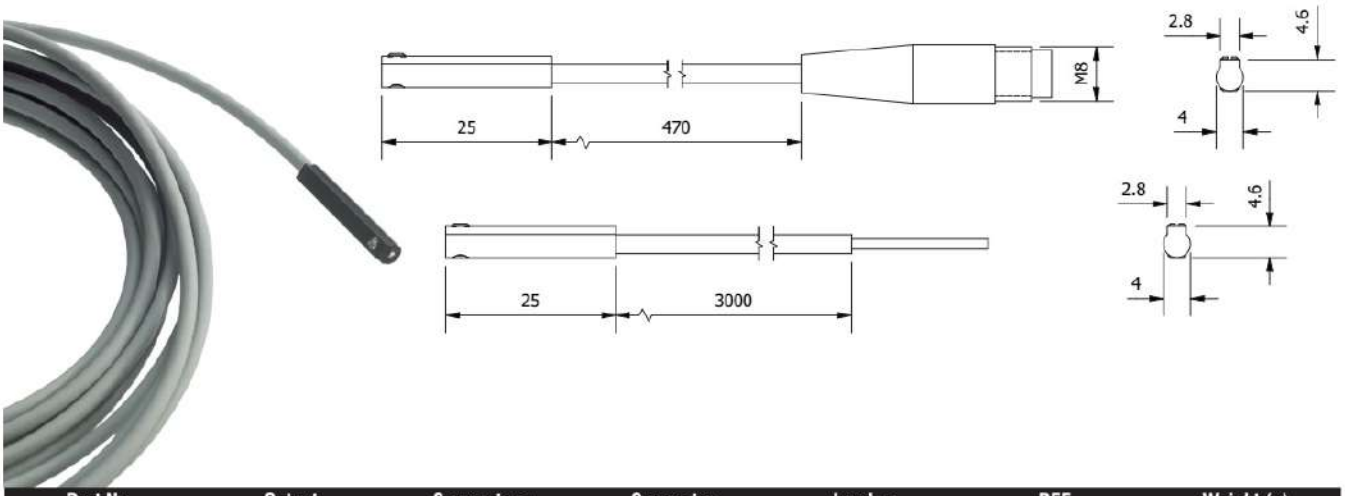

Part No.	Output	Sensor type	Connector	Lead m	REF	Weight (g)
SN.DMSHPM8	PNP	Electronic	M8 3pin	0.5	PG	4
SN.DMSHNM8	NPN	Electronic	M8 3pin	0.5	PG	4
SN.DMSHP3M	PNP	Electronic		3	PG	4
SN.DMSHN3M	NPN	Electronic		3	PG	4

SN.DMSG. – Sensor

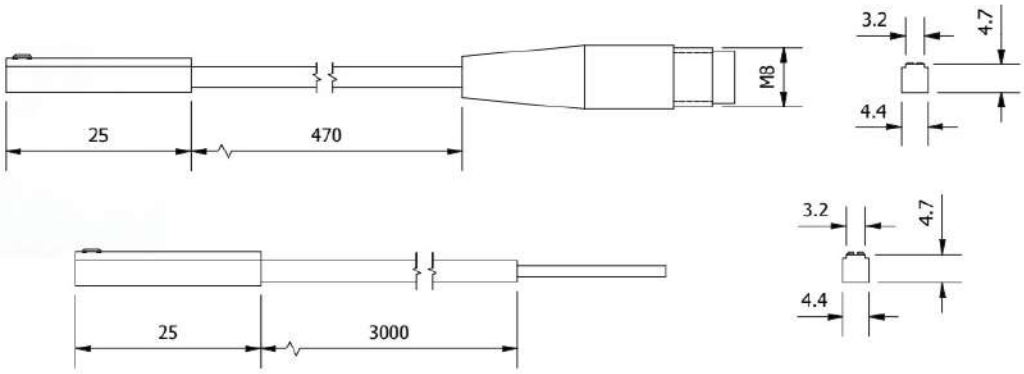

Part No.	Output	Sensor type	Connector	Lead m	REF	Weight (g)
SN.DMSGP.M8	PNP	Magnetic	M8 3pin	0.5	PG/AG/CCTQ/CCAQ	4
SN.DMSGN.M8	NPN	Magnetic	M8 3pin	0.5	PG/AG/CCTQ/CCAQ	4
SN.DMSGP.3M	PNP	Magnetic		3	PG/AG/CCTQ/CCAQ	4
SN.DMSGN.3M	NPN	Magnetic		3	PG/AG/CCTQ/CCAQ	4

SNB. – Sensor Box

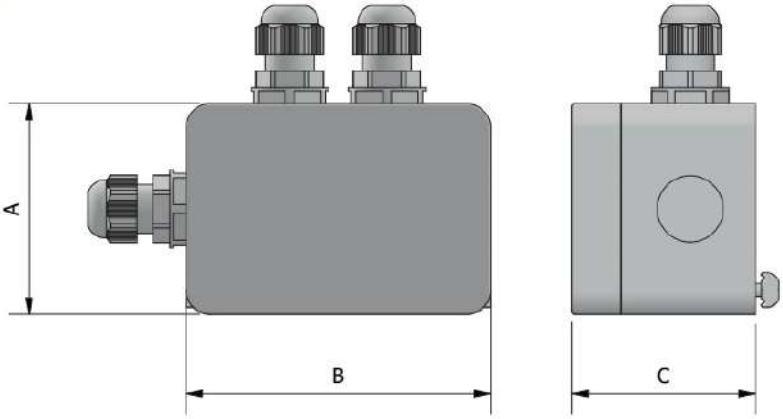

Part No.	Power supply	Max. # of Sensors	A	B	C
SNB.02C	24V dc (+/- 10%)	2	45	100	45
SNB.04C	"	4	65	94	57
SNB.06C	"	6	94	94	57
SNB.08C	"	8	94	130	57
SNB.12C	"	12	94	180	57

- Used for sensor wiring on an EOAT
- PNP and NPN signals can be converted.
- I/O can be current sourcing (PNP), sinking (NPN) or dry contact.
- Sensor boxes can be connected in series.
- LED indicators allow for easy trouble shooting.
- Programming method – jump wire.
- Provided with strain reliefs and fastening set.

END OF BARREL

07.

285 OEM NOZZLE TIPS

286 REMOVABLE NOZZLE TIPS

287 SCREW TIPS

288 TIP SPANNER

290 NOZZLE BODY ADAPTORS

OEM NOZZLE TIPS - COMPATIBLE WITH EUROPEAN MACHINES

General Purpose Type

Nylon Type

Part Number	Part Number	Length	Thread	Radius	Orifice
AGP1-12,7-1,5		50	M24x1,5	12,7	1,5
AGP1-12,7-2,5					2,5
AGP1-12,7-3	ARNT1-12,7-3				3
AGP1-12,7-4	ARNT1-12,7-4				4
AGP1-12,7-5	ARNT1-12,7-5				5
AGP1-12,7-6	ARNT1-12,7-6				6
AGP1-12,7-8					8
AGP1-15-1,5				15	1,5
AGP1-15-2,5					2,5
AGP1-15-3	ARNT1-15-3				3
AGP1-15-4	ARNT1-15-4				4
AGP1-15-5	ARNT1-15-5				5
AGP1-15-6	ARNT1-15-6				6
AGP1-19-1,5				19	1,5
AGP1-19-2,5					2,5
AGP1-19-3	ARNT1-19-3				3
AGP1-19-4	ARNT1-19-4				4
AGP1-19-6	ARNT1-19-6				6
AGP2-12,7-1,5		75		12,7	1,5
AGP2-12,7-2,5					2,5
AGP2-12,7-3	ARNT2-12,7-3				3
AGP2-12,7-4	ARNT2-12,7-4				4
AGP2-12,7-5	ARNT2-12,7-5				5
AGP2-12,7-6	ARNT2-12,7-6				6
AGP2-12,7-8	ARNT2-12,7-8				8
AGP2-15-1,5				15	1,5
AGP2-15-2,5					2,5
AGP2-15-3	ARNT2-15-3				3
AGP2-15-4	ARNT2-15-4				4
AGP2-15-5					5
AGP2-15-6	ARNT2-15-6				6
AGP2-19-1,5				17	1,5
AGP2-19-2,5					2,5
AGP2-19-3	ARNT2-19-3				3
AGP2-19-4					4
AGP2-19-5					5
AGP2-19-6					6
AGP3-12,7-1,5		95		12,7	1,5
AGP3-12,7-2,5					2,5
AGP3-12,7-3	ARNT3-12,7-3				3
AGP3-12,7-4	ARNT3-12,7-4				4
AGP3-12,7-5	ARNT3-12,7-5				5
AGP3-12,7-6					6
AGP3-15-1,5				15	1,5
AGP3-15-2,5					2,5
AGP3-15-3	ARNT3-15-3				3
AGP3-15-4	ARNT3-15-4				4
AGP3-15-5	ARNT3-15-5				5
AGP3-19-1,5				19	1,5
AGP3-19-2,5					2,5
AGP3-19-3	ARNT3-19-3				3
AGP3-19-6					6

OEM Tips fully compatible with original tips. The tips are available in different lengths, with different tip radius and orifice.

Features:
- High Quality
- Hardened tool steelt
- All standard sizes in stock

REMOVABLE NOZZLE TIPS

The MOULDPRO Removable Nozzle Tip System saves Time and Money!

The Quick Change nozzle tip system was developed to offer a fast an economical solution for injection moulders to adapt their moulding machines to different tools and materials.

By replacing the manufacturers nozzle body with the MOULDPRPO replaceable tip design the moulder can benefit from using MOULDPRO standard 'quick change' replaceable tips.

The tips are available in different lengths, with different tip radius and orifice; the tips are available as General Purpose / Nylon Reverse Taper or ABS Full Taper.

- High Quality
- Hardened Tool Steel
- All Standard Sizes in Stock
- Standardise your factory and Save Money
- Standardise Size of Nozzle Heater Bands
- Custom designs available

Removable Nozzle Tips

General Purpose Type	Nylon Type	Full Taper				
Part Number	**Part Number**	**Part Number**	**Thread Type**	**Total Length**	**Radius**	**Orifice Ø**
GP1-R12.7-1.5			7/8" UNF	38	12,7	1,5
GP1-R12.7-2						2
GP1-R12.7-2.5						2,5
GP1-R12.7-3	NRT1-R12.7-3	FT1-R12.7-3				3
GP1-R12.7-4	NRT1-R12.7-4	FT1-R12.7-4				4
GP1-R12.7-5	NRT1-R12.7-5	FT1-R12.7-5				5
GP1-R12.7-6.5	NRT1-R12.7-6.5	FT1-R12.7-6.5				6,5
GP1-R12.7-8	NRT1-R12.7-8	FT1-R12.7-8				8
GP1-R15-1.5					15	1,5
GP1-R15-2.5						2,5
GP1-R15-3	NRT1-R15-3	FT1-R15-3				3
GP1-R15-4	NRT1-R15-4	FT1-R15-4				4
GP1-R15-5	NRT1-R15-5	FT1-R15-5				5
GP1-R15-5.5	NRT1-R15-5.5	FT1-R15-5.5				5,5
GP1-R15-6.5	NRT1-R15-6.5	FT1-R15-6.5				6,5
GP1-R15-7	NRT1-R15-7	FT1-R15-7				7
GP1-R15-8	NRT1-R15-8	FT1-R15-8				8
GP1-R15-9.5	NRT1-R15-9.5	FT1-R15-9.5				9,5
GP1-R19-3	NRT1-R19-3	FT1-R19-3			19	3
GP1-R19-4	NRT1-R19-4	FT1-R19-4				4
GP1-R19-5.5	NRT1-R19-5.5	FT1-R19-5.5			30	5,5
GP1-R30-3	NRT1-R30-3	FT1-R30-3				3
GP1-R30-7	NRT1-R30-7	FT1-R30-7				7
GP2-R12.7-3	NRT2-R12.7-3			70	12,7	3
GP2-R19-3	NRT2-R19-3				19	3
GP3-R12.7-3	NRT3-R12.7-3			95	12,7	3
GP4-R12.7-3	NRT4-R12.7-3			127		3

Removeable Nozzle tips, Heat Treated Tool Steel, Polished Radius and Bore.

Screw Tip Assembly

Part No.	Diameter
STA-18	18mm
STA-20	20mm
STA-22	22mm
STA-25	25mm
STA-27	27mm
STA-28	28mm
STA-30	30mm
STA-32	32mm
STA-33	33mm
STA-35	35mm
STA-37	37mm
STA-38	38mm
STA-40	40mm
STA-42	42mm
STA-43	43mm
STA-45	45mm
STA-47	47mm
STA-48	48mm
STA-50	50mm
STA-52	52mm
STA-55	55mm
STA-60	60mm
STA-62	62mm
STA-65	65mm

Part No.	Diameter
STA-67	67mm
STA-70	70mm
STA-72	72mm
STA-75	75mm
STA-78	78mm
STA-80	80mm
STA-85	85mm
STA-90	90mm
STA-95	95mm
STA-100	100mm
STA-105	105mm
STA-110	110mm
STA-120	120mm
STA-125	125mm
STA-130	130mm
STA-135	135mm
STA-140	140mm
STA-150	150mm
STA-155	155mm
STA-160	160mm
STA-170	170mm
STA-180	180mm
STA-190	190mm
STA-200	200mm

For all popular makes of moulding machine.
Complete nitrided screw tip assembly including Screw Tip, Check Ring and Pressure Ring.
Please advise machine make / model / tonnage and screw size when ordering.

TIP SPANNER

Screw Tip Spanner

Part No.	Screw tip Size
123894	Max 75 mm

Tip spanner, ideal for fast and safe Screw tip replacement.
Adjustable for Screw Tips up to 75mm, 3, 4, 5 Flute.
Foam Grip.

Leather Gloves

Part No.	Size
WG08/R8	MULTI

Ideal for handling hot machine parts.
Rated up to 200°C EN-407.

CUSTOM NOZZLE TIP FORM

SPECIFY

1. External Style of Nozzle Tip:

☐ Standard ☐ Flat Face*

2. Internal Design of Nozzle Tip:

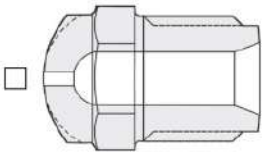

General Purpose Internal Design

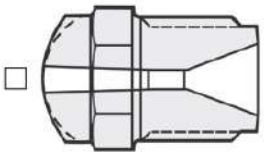

Nylon Internal Design

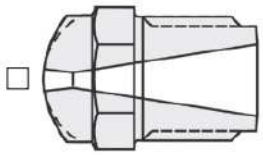

Full Taper Internal Design

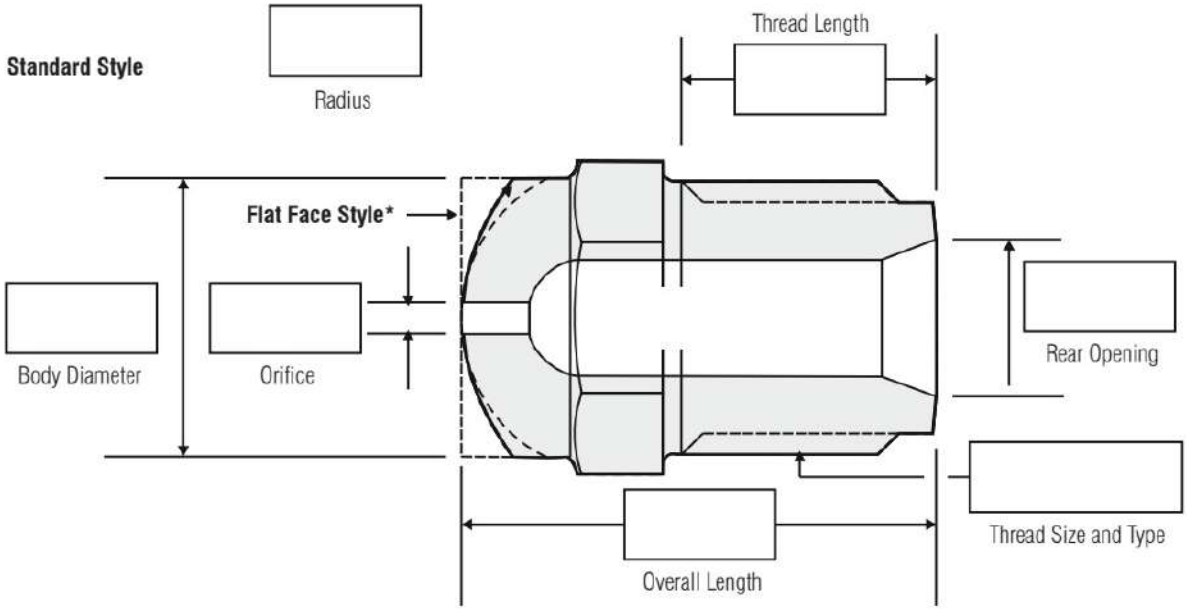

Date: _____ Quantity: _____ Phone: _____

Name _____ Title _____

Company _____ Email _____

Address _____

City _____ Zip _____

Country _____

ORDER FORM

Nozzle Body

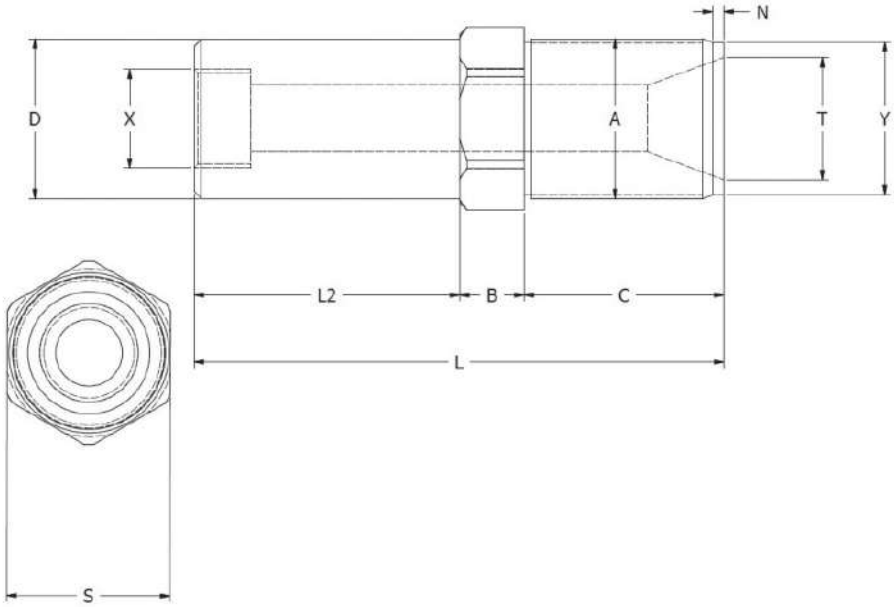

L	L2	B	C	D	X	T	Y	A	N	S

Metric only (mm)

Machine/Model _____

Company _____

Contact _____

Telephone _____

Contact e-mail _____

ORDER FORM

Solid Nozzle

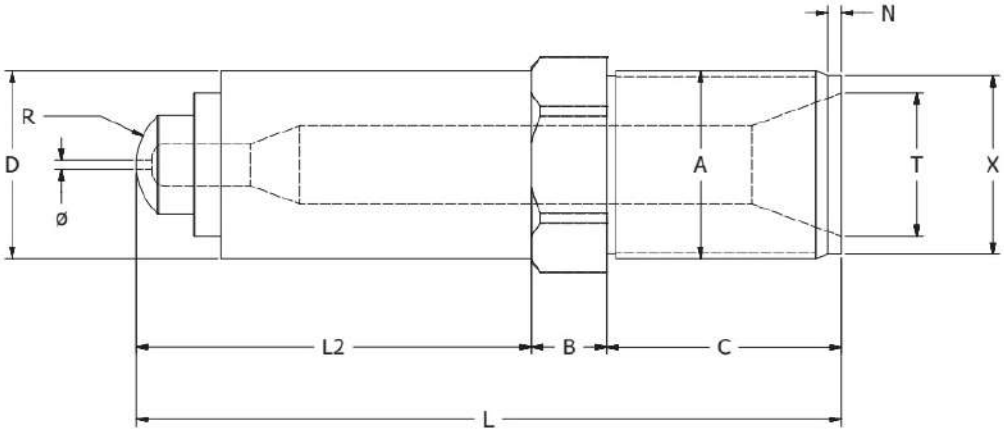

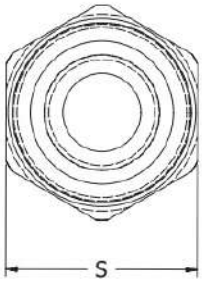

L	L2	B	C	D	X	R	Ø	T	A	N	S

Metric only (mm)

Machine/Model _____

Company _____

Contact _____

Telephone _____

Contact e-mail _____

TOOLS & ACCESSORIES

08.

293 GATE CUTTERS

296 DEBURRING TOOLS

297 SOFT TOOLS

299 PRY BARS

300 ACCESSORIES

303 POLISHING & ABRASIVES

308 BRUSHES

310 COMPRESSED AIR BLOW GUNS

311 MEASURING TOOLS

313 MAGNIFYING GLASSES

Gatecutter 15° Flush Cut

Part No.	Cut Type	Size	Handle Type
P40	15° - flush cut	4" / 100 mm	Plastic Grip
P50	15° - flush cut	5" / 125 mm	Plastic Grip
P60	15° - flush cut	6" / 150 mm	Plastic Grip
P70	15° - flush cut	7" / 175 mm	Plastic Grip

Gatecutter 15° Flush Cut

Part No.	Cut Type	Size	Handle Type
P55	15° - flush cut	5" / 125 mm	Plastic Grip
P65	15° - flush cut	6" / 150 mm	Plastic Grip

Gatecutter 40° Flush Cut

Part No.	Cut Type	Size	Handle Type
P60-40	40° - flush cut	6" / 150 mm	Plastic Grip

Gatecutter 90° Flush Cut

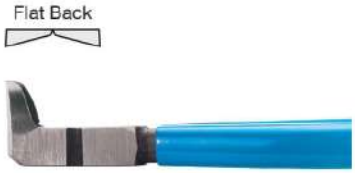

Part No.	Cut Type	Size	Handle Type
P60-90	90° - flush cut	6" / 150 mm	Plastic Grip

High quality alloy steel.
Coil spring return provides fast smooth action and improves productivity.
Induction hardened cutting edge.
Black oxide, anti-glare finish reduces visual fatigue and corrosion.

GATE CUTTERS

Heated Gate Cutters

Part No.	Back	Blade Length (mm)	Blade Type	Blade Angle	Size (mm)	Cut capacity (mm)	Weight	
HT-120	Flat Back	10	End Cut	–	150	ø 4	270 g	
HT-130	Flat Back	27	Long	10°	165	ø 4	270 g	
HT-140	Flat Back	22	Flat	–	160	ø 4	265 g	
HT-160	Curved Back	16	Narrow	10°	150	ø 4	240 g	
HT-170	Flat Back	22	Angle	40°	150	ø 4	250 g	
HT-180	Curved Back	16	Standard	25°	190	ø 4	250 g	
HT-200	Curved Back	23	Heavy Duty 29 Watt	16°	190	ø 7	375 g	

Transformer for Heated Gate Cutters

Part No.	Power Input	Voltage output	Size (mm)
MHN-PS01	110-240V.	24 V.	45x110x165

Spare Heating Element

Part No.	Power input	Heat Effect
W-19	24 V	19 Watt
W-29	24 V	29 Watt

PREMIUM TOOLS FOR PROFESSIONALS

Ceramic Knife

Ideal for curved and complicated shapes;
Excels on ultra-hard resins like Glass-fiber, carbon-fiber and talc filled plastics.

Also it can be used on soft metals like aluminum, copper and brass.

- Space age ceramics make safe deburring possible because of Work-finisher's unique non-blade like edge. (No sharp edge)
- Deburrs hard plastics effortlessly without the fear of cutting your hand or fingers in the process. (Very safe knife)
- Can be used for surface finishing the plastics moulding parts, very small, very confined areas, narrow, concave area or complex portion.

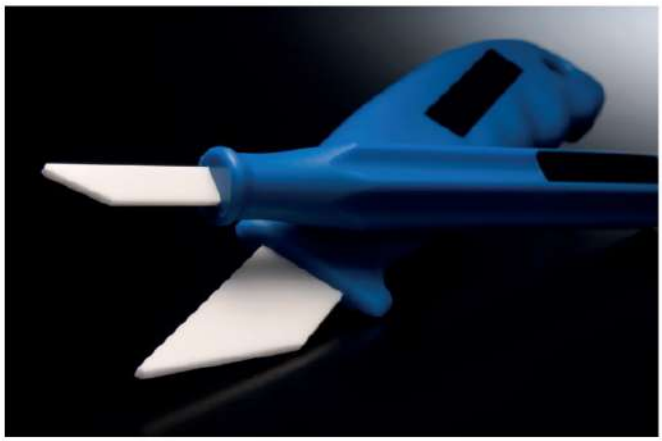

Ceramic Knife

Part No.	Blade material	Length	Blade dimension	Blade Profile	
MWF133	Ceramic 1250 HV	133 mm	25 x 5 mm	Convexed	1

Ceramic Knife

Part No.	Blade material	Length	Blade dimension	Blade Profile	
MWF175	Ceramic 1250 HV	175 mm	40 x 14 mm	Convexed	1

De-burring Tool

Part No.	Type	Blade Material	No. of blades	Blade size ø	
E02000	Handle	Steel	1	3,2	1
BS1010	Replacement blades	Steel	10	3,2	1

Bronze Pliers Angled, Short

Part No.	Description	Size	
BC60	60° Needle Nose	6"/ 150 mm	1

Bronze Pliers Angled, Long

Part No.	Description	Size	
BC90	60° Needle Nose	9"/ 230 mm	1

Bronze Pliers Straight, Short

Part No.	Description	Size	
BL60	Straight Needle Nose	6"/ 150 mm	1

Bronze Pliers Straight, Long

Part No.	Description	Size	
BL90	Straight Needle Nose	9"/ 230 mm	1

Bronze Side Cutter

Part No.	Description	Size	
BD60	Side Cutter	6"/ 150 mm	1

High quality Bronze Pliers, reduce risk of damaging the mould.

SOFT TOOLS

Bevelled Blade Scraper

Part No.	Blade Width	Blade Length	Total Length	Material	
BSC125L	25 mm	177 mm	273 mm	Brass	1
BSC125	32 mm	100 mm	200 mm	Brass	1
BSC200	50 mm	100 mm	200 mm	Brass	1

Angled Scraper no Bevel

Part No.	Blade Width	Material	
BSC125A	32 mm	Brass	1

Knock Out Bar

Part No.	Description	Size	
704-31	Knock out Bar	ø 8	1
705-31	Replacement Bar	ø 8	1

Simple but effective tool that combines a tough steel rod with threaded brass replaceable tips that prevent damage to the mould surface.
The quickly replaced threaded brass tip ensures that the rod never gets too short or wears out and minimises the risk of burning.
The steel rod never wears out and the end will not 'mushroom' like a solid brass rod.

- Steel Rod has an anti-rust finish.
- Steel Rod has 10mm Flat for simple removal of used tips.
- Brass Tip is machined to fine point.
- Supplied complete with one replacement tip.

Steel Rod: 13mm dia. / 420mm length.
Brass Tip: 8mm dia. / 105mm length.

Brass Tools

Part No.	Description	Length	
BRT5	5mm Diameter	350mm	1
BRT5/90	5mm Diameter / 90 Degree	350mm	1
BRT8	8mm Diameter	400mm	1
BRTK	Kit Comprising BRT5 / BRT5/90 / BRT8		1

A range of brass hand tools manufactured from high grade brass for safely working on mould tools without damaging the mould surface; ideal for removing frozen sprues or stuck parts.
The tips are supplied blunt and may be shaped to suit specific requirements.

Premium Aluminium Bronze Pry Bars

Pry Bar, Radius Head

Part No.	Length	Hex	Weight (kg)	
MPB-500	18" - 460 mm.	5/8"	0,8	1

Pry Bar, Rolling Head

Part No.	Length	Hex	Weight (kg)	
MPB-600	18" - 460 mm.	5/8"	0,75	1

Pry Bar, Angle Head

Part No.	Length	Hex	Weight (kg)	
MPB-700	18" - 460 mm.	5/8"	0,7	1

Description

Premium Alu-Bronze Alloy Pry Bars ideal for alignment and assemble/disassemble mould bases without risk of surface damages or scratches.

Hot Tip Sprue Cleaner-Automatic

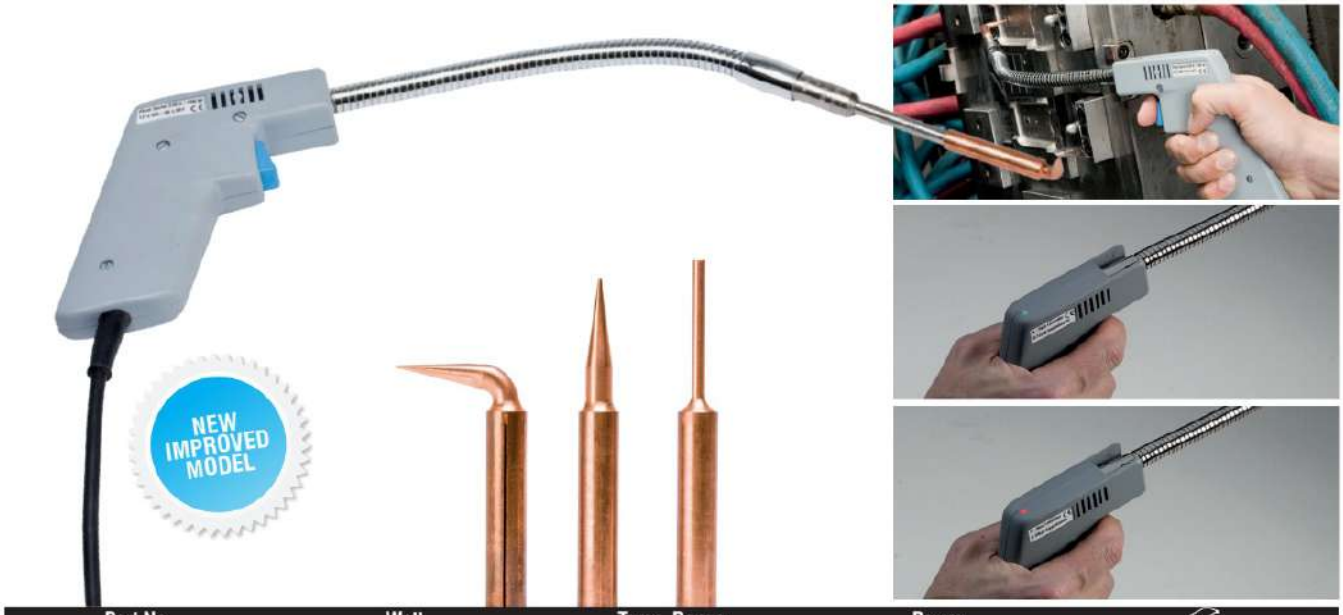

Part No.	Watt	Temp. Range	Power	
PS6-5AUTO	200	350°C	230V.	1

The Hot Tip Sprue Cleaner is a quick heating flexible tool for melting thermoplastics from plugged sprues and nozzles.
When you squeeze the trigger the powerful heater immediately heats the tip to 350°C.

- 3 Copper Tips included.
- Flexible Arm.
- 2,5 meter cord.
- Automatic timer: The integrated timer heats up the tip for approx. 10 seconds and then wait 50 seconds before next cycle is possible. A light will indicate heating action (green) and pause (red).

Replacement Tips for Sprue Cleaner

Part No.	Number	Description	Material
PS6-8	8	Straight Cone	Copper
PS6-9	9	Straight Blade	
PS6-10	10	90° Cone	
PS6-11	11	Straight Cylinder	
PS6-12	12	45° Cone	
PS6-13	13	45° Blade	
PS6-14	14	Straight Cylinder Slim	

Copper and Rawhide Mallet

Part No.	Size	Ø	Weight	Length	
THO208	A	25 mm	355 g	230 mm	1
THO210	1	32 mm	710 g	270 mm	1
THO212	2	38 mm	1070 g	305 mm	1
THO214	3	44 mm	1600 g	305 mm	1
THO216	4	50 mm	2380 g	355 mm	1

Malleable-iron head fitted with one face of pure copper, the other highly compressed buffalo rawhide.
Wooden Handle.

Nylon Hammer

Part No.	Face diameter	Weight	Length	
THO710	32 mm	445 g	280 mm	1
THO712	38 mm	650 g	305 mm	1
THO714	44 mm	850 g	305 mm	1
THO716	50 mm	1230 g	305 mm	1

- Worn faces can be quickly replaced BY HAND providing minimum down time.
- All faces are one piece mouldings.
- There are no metal pegs or inserts which can damage the workpiece when worn.
- Serrations in the metal head prevent faces loosening in use.
- Faces have a shoulder for extra strength and to prevent fracture from misdirected blows.
- To suit a wide range of hammering applications 5 alternative hardness of screw-in faces are available – colour coded for easy identification.

Dead Blow Nylon Hammer

Part No.	Face diameter	Weight	Length	
THO1010	32 mm	550 g	275 mm	1
THO1212	38 mm	700 g	305 mm	1
THO1414	44 mm	900 g	310 mm	1
THO1616	50 mm	1150 g	325 mm	1
THO2020	63 mm	1850 g	370 mm	1

Thorace dead blow hammers are a coated die-cast head and handle of aluminium alloy with shock absorbent rubber grip.
The hollow head is partially filled with steel shot which adds to the weight, prevents rebound and delivers 'dead' blows of maximum impact.

Spare Faces

Face Diameter		Soft Grey Shore A 63-73	Medium Red Shore D 45-55	Tough Brown PU Shore D 58-62	Hard White Nylon Shore D 57-61	Extra Hard Yellow Rockwell R103
32	10	THO-SG10	THO-MR10	THO-TB10	THO-HW10	THO-HY10
38	10	THO-SG12	THO-MR12	THO-TB12	THO-HW12	THO-HY12
44	10	THO-SG14	THO-MR14	THO-TB14	THO-HW14	THO-HY14
50	10	THO-SG16	THO-MR16	THO-TB16	THO-HW16	THO-HY16
63	10	-	-	THO-TB20	THO-HW20	-

Ballpoint L-Hex Key Sets

Part No.	Pieces in set	Sizes	Type	
BLX9	9	1.5-2-2.5-3-4-5-6-8-10 mm.	Metric	1
BLX13	13	3/64-1/16-5/64-3/32-7/64-1/8-5/32-9/64-3/16-7/32-1/4-5/16-3/8	Imperial	1

Protanium® steel and are up to 20% stronger than competitor tools.
BriteGuard premium chrome-like finish is attractive, professional quality, and easy to clean.

Mini Grinding Machine

Part No.	Speed	Voltage	Collet	Foot Control	
PP35SET	0-35.000 rpm	115/230 V.	3 mm	Yes	1

Spare Collets

Part No.	Collet	
PP35C235	2,35 mm	1
PP35C300	3,00 mm	1
PP35C3175	3,175 mm	1

Straight Air Micro Grinder

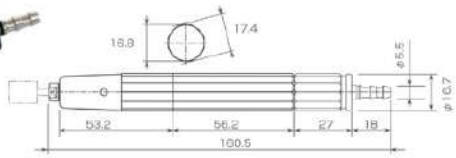

Part No.	RPM	Collet size	Weight nt.	Weight Gross
MSG-3BSN	65.000	ø 3,0 mm	130 g	340 g

Outstanding accuracy and durability.
Low air consumption at 0.4 Mpa.

Set of Package

- Air hose 1.5m.
- Hose band 2 pcs.
- Quick joint.
- Over hose set pin.
- Wrench.
- Ø 10 Mounted point.
- Ø13 Mounted NSL 2 pcs.
- Lap shaft.
- Ø 25 disk type NSL 7 pcs.

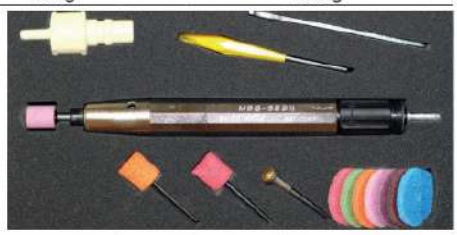

Linear Air Polisher

Part No.	Collet	Strokes /min	Linear Stroke	Noise level	Weight nt.	Weight Gross
TLL-07	Ø3 / 0.5-3 x 4-10 mm	22-25.000	0,7 mm.	64 dB (A)	180 g	340 g

Linear reciprocating stroke filing for polishing narrow areas and corners of precision parts.
Ideal for Mould Finishing Super Stones.

Set of Package

- Turbolap (Body).
- Super collet.
- Air hose 1.5m.
- Hose band 2 pcs.
- Quick joint.
- Over hose.
- TL Wrench.
- Ceramic stone 1pc.

Diamond Points Set

Part No.	Grit size	Shank	
DP2030	D100	3 mm	1 (set of 30 pcs)

Carbide Burrs Set

Part No.	Cut type	Shank	
CB10S	Double cut	3 mm	1 (set of 10 pcs)

Diamond Needle File Set

Part No.	Description	Size	Grit Size	
DIAZ-5	Diamond Needle files	140 mm	D126	1

Quality Diamond File Set, useful for working with steel, hardened steel, carbide and ceramic/glass materials.

Mould Finishing Super Stones

New SuperStone offers an improved cutting ability, longer life and an increased heat resistance of approximately 45% over the conventional type. New SuperStone can be used in ultrasonic polishing machines, electric micro grinders, reciprocating profilers, or by hand use with holder.

SuperStone can also be used on soft metals such as aluminium, copper and brass.

- Incredible strength and flexibility. It will offer excellent polishing ability even under every strenuous condition.
- Non-clogging. Beautiful polishing result on all types of metals in small and detailed areas.
- Available in any dimensions in flat/round profiles upon your demand.
- Available in grit 120 to 1200. Easy to identify by colour-coding.

Flat Type

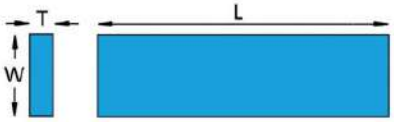

Size (mm) T x W x L	VIOLET (#80)	EMERALD (#120)	GOLD (#180)	L.BROWN (#300)	ORANGE (#400)	BROWN (#600)	BLUE (#800)	WHITE (#1000)	RED (#1200)	
0.8 x 4 x 100	NSV084	NSE084	NSG084	NSL084	NSO084	NSP084	NSB084	NSW084	NSR084	1
0.8 x 6 x 100	NSV086	NSE086	NSG086	NSL086	NSO086	NSP086	NSB086	NSW086	NSR086	1
1.0 x 4 x 100	NSV104	NSE104	NSG104	NSL104	NSO104	NSP104	NSB104	NSW104	NSR104	1
1.0 x 6 x 100	NSV106	NSE106	NSG106	NSL106	NSO106	NSP106	NSB106	NSW106	NSR106	1
1.5 x 4 x 100	NSV154	NSE154	NSG154	NSL154	NSO154	NSP154	NSB154	NSW154	NSR154	1
1.5 x 6 x 100	NSV156	NSE156	NSG156	NSL156	NSO156	NSP156	NSB156	NSW156	NSR156	1

Round Type

Size (mm) D x L	VIOLET (#80)	EMERALD (#120)	GOLD (#180)	L.BROWN (#300)	ORANGE (#400)	BROWN (#600)	BLUE (#800)	WHITE (#1000)	RED (#1200)	
3,0 x 100	NSVD3B	NSED3B	NSGD3B	NSLD3B	NSOD3B	NSPD3B	NSBD3B	NSWD3B	NSRD3B	1

Stone Holders

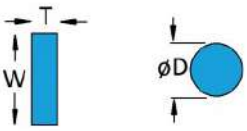

Part No.	W (mm)	T (mm)	D (mm)	
SSH-4	4	0,5 - 3	-	1
SSH-6	6	0,5 - 3	-	1
SNH-30	-	-	ø3	1

Diamond Paste

Part No.	Micron	Size	
MPD1	1	5 gr.	1
MPD3	3	5 gr.	1
MPD6	6	5 gr.	1
MPD8	8	5 gr.	1
MPD14	14	5 gr.	1
MPD25	25	5 gr.	1

High concentration diamond paste for rapid polishing and repair of moulds.
Use with felt stick, wood sticks or points.

Felt Bobs - Cylindrical

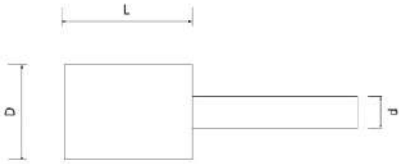

Part No.	D	L	d1	
FIL612C	6	12	3	1 (bag of 10 pcs)
FIL1012C	10	12	3	1 (bag of 10 pcs)
FIL1219C	12	19	3	1 (bag of 10 pcs)
FIL1632C	16	32	3	1 (bag of 10 pcs)
FIL1932C	19	32	6	1 (bag of 10 pcs)
FIL3238C	32	38	6	1 (bag of 10 pcs)

Felt Bobs - Cone Shape

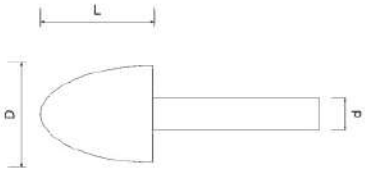

Part No.	D	L	d1	
FIL616K	6	16	3	1 (bag of 10 pcs)
FIL1012K	10	12	3	1 (bag of 10 pcs)
FIL1219K	12	19	3	1 (bag of 10 pcs)
FIL1625K	16	25	3	1 (bag of 10 pcs)
FIL1925K	19	25	6	1 (bag of 10 pcs)

Felt Sticks - Hardened

Part No.	d1	d2	L	
FIL66100	6	6	100	1 (bag of 10 pcs)
FIL1010150	10	10	150	1 (bag of 10 pcs)

Hard Wood Lapping Sticks

Part No.	Shape	d1	d2	L	
LS3	Rectangular	3	4,5	150	1 (bag of 10 pcs)
LS6	Rectangular	6	4,5	150	1 (bag of 10 pcs)
LSS3	Square	3	3	150	1 (bag of 10 pcs)
LSS6	Square	6	6	150	1 (bag of 10 pcs)
LSR3	Round	ø3	ø3	150	1 (bag of 10 pcs)
LSR6	Round	ø6	ø6	150	1 (bag of 10 pcs)

Handpads

Part No.	Size	Grade	Colour	
NHP021	155x225 mm	Fine	Green	1 (Bags of 10 pcs)
NHP006	155x225 mm	Very Fine	Maroon	1 (Bags of 10 pcs)
NHP008	155x225 mm	Ultra Fine	Light Grey	1 (Bags of 10 pcs)

A range of general purpose handpads designed for cleaning and finishing applications.

Copper Gauze

Part No.	Width	Length	
CG30	130	30m.	1

Knitted Copper, Reversible Soft Copper perfect for cleaning Screws etc.

Small Bore Cleaning Brush (Brass / Nylon) With Loop Handle

Part No. Brass	Part No. Nylon	Diameter	Brush Length	Total length	
-	SN2	2	100	300	1
SB3	SN3	3	100	300	1
SB4	SN4	4	100	300	1
SB5	SN5	5	100	300	1
SB6	SN6	6	100	300	1
SB8	SN8	8	100	300	1
SB10	SN10	10	100	300	1
SB12	SN12	12	100	300	1
SB15	SN15	15	100	300	1
SB20	SN20	20	100	300	1
SB25	SN25	25	100	300	1

Condenser Brush

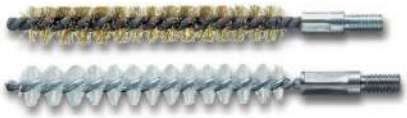

Part No. Brass	Part No. Nylon	Diameter mm	Thread	Brush Length	Total Length	
CBB6	CBN6	6	M4	80	115	1
CBB8	CBN8	8	M6	80	115	1
CBB10	CBN10	10	M6	80	115	1
CBB12	CBN12	12	M6	80	115	1
CBB14	CBN14	14	M6	80	115	1
CBB16	CBN16	16	M6	80	115	1
CBB18	CBN18	18	M6	80	115	1
CBB20	CBN20	20	M6	80	115	1

Single Spiral Brush with thread, ideal for cleaning inside bores.

Hand Brush

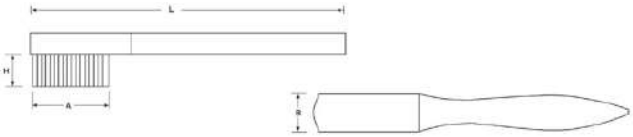

Part No.	Material	Rows	L	B	A	H	
HBM3-5	Brass	3 x 5	150	15	35	15	1
HBM5-10	Brass	5 x 10	190	24	55	12	1
HBM4-15	Brass	4 x 15	290	40	140	25	1

Allround brushes with wooden handle. Perfect for cleaning surfaces without damaging the Mould parts.

Barrel Cleaning Brushes

Part No.	Diameter mm	Diameter Inch	Thread	Brush Length	Total Length	
BC20	20	3/4"	W 3/8"	100	150	1
BC22	22	7/8"	W 3/8"	100	150	1
BC25	25	1"	W 3/8"	100	150	1
BC28	28	1-1/8"	W 3/8"	100	150	1
BC30	30	1-1/4"	W 1/2"	100	160	1
BC35	35	1-1/4"	W 1/2"	100	160	1
BC40	40	1-1/2"	W 1/2"	100	160	1
BC44	44	1-1/4"	W 1/2"	100	160	1
BC50	50	2"	W 1/2"	100	160	1
BC57	57	2-1/4"	W 1/2"	100	160	1
BC63	63	2-1/2"	W 1/2"	100	160	1
BC69	69	2-3/4"	W 1/2"	100	160	1
BC75	75	3"	W 1/2"	100	160	1
BC82	82	3-1/4"	W 1/2"	100	160	1
BC88	88	3-3/8"	W 1/2"	100	160	1
BC94	94	3-5/8"	W 1/2"	100	160	1
BC101	101	4"	W 1/2"	100	160	1
BC125	125	5"	W 1/2"	100	160	1
BC150*	150	6"	W 1/2"	100	160	1
BC200*	200	8"	W 1/2"	100	160	1

* Single Spiral.
Heavy Duty Double Spiral Steel Brush ideal for cleaning Barrel Cylinders of Injection Moulding Machines.

Handles and Extensions

Part No.	Thread	Type	Length	
HD1000	M4	Handle	1000 mm	1
ED1000	M4	Extension	1000 mm	1
HC1000	M6	Handle	1000 mm	1
EC1000	M6	Extension	1000 mm	1
HA1000	W 3/8"	Handle	1000 mm	1
EA1000	W 3/8"	Extension	1000 mm	1
HB1000	W 1/2"	Handle	1000 mm	1
EB1000	W 1/2"	Extension	1000 mm	1

COMPRESSED AIR BLOW GUNS

Blow Gun in Forged Aluminium

Part No.	Working Pressure	Tube size	Tube Extended Length	Tube Block Length	Connection	
MBG-S	15 Bar	6,5x10	6 m.	490 mm	R 1/4"	1

- Blow gun sets with Polyurethane Spiral Hose.
- Polyamide bend - and scratch protection.
- High quality, robust and handy design.
- Useful for all applications.

Blow Gun in Plastic

Part No.	Working Pressure	Tube size	Tube Extended Length	Tube Block Length	Connection	
MBG-P	15 Bar	6,5x10	6 m.	490 mm	R 1/4"	1

- Blow gun sets with Polyurethane Spiral Hose.
- Polyamide bend - and scratch protection.
- High quality, robust and handy design.
- Useful for all applications.

Digital Caliper 0-150 mm

Part No.	Range (mm)	Resolution	Battery	
DC150	0-150	0,01 mm	1,55V (SR44W)	1

Radius Gauge - Concave and Convex Form

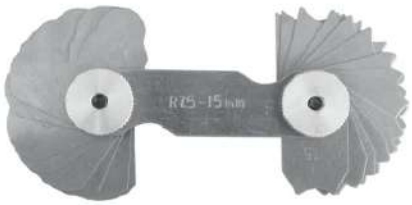

Part No.	Range (mm)	# Blades	
RG17	1,0-7,0	17	1
RG715	7,5-15,0	16	1
RG1525	15,5-25,0	15	1
RG2550	25,0-50,0	20	1

Thread Pitch Gauge - Metric, Whitworth, Pipe Thread

Part No.	Metric 60° Pitch/mm	Whitworth 55° Pitch/Inch	Pipe Thread 55° Pitch/Inch	# Blades	
SPG58	0,25-6,00	62-4	28RG-8RG	58	1

Steel Ruler 300x30x1,0 mm/Inch - Chrome Plated

Part No.	Length (mm)	Width (mm)	Thickness (mm)	
SR300	300	30	1	1

Mouldpro Tape Measure

Part No.	Coil length (m)	Width (mm)	
MPT5	5	19	1
MPT8	8	25	1

Professional Quality Tape Measure with chrome plated tough ABS plastic case and integrated thumb lock.
High visibility anti-glare blade with polymer coating to extend blade life. Class 2 Blade 19mm (5m) / 25mm (8m) Wide Blade Metric / Imperial Scale. Compact & Durable Case.
3-Rivet True-Zero End Hook Belt Clip.

Handheld Magnifier 2,5x Ø90 mm - Glass Lens and 12 x Leds

Part No.	Magnification	Lens diamenter	# LED lights	dimensions	
HM90	2,5 X	Ø 90 mm	12 pcs.	241 x 110 x 14 mm	1

Material (lens): Glass.
Material (body): Metal (Zinc alloy).
Battery: 2 x AA 1,5 V (NOT included).
Packing: Black padded case.

Handheld Magnifier 3X/5X/7X - with LED Light

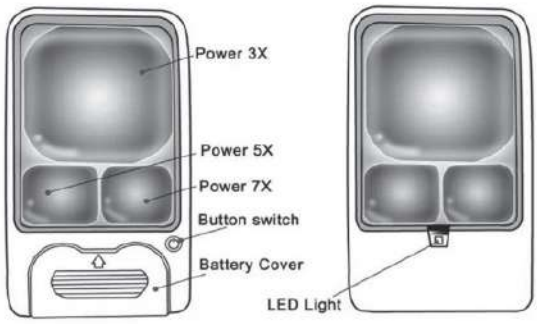

Part No.	Magnification	Lens diameter	# LED lights	dimensions	
HM50	3X/5X/7X	50x50/20x25	1	117x61x9 mm	1

Material (body): ABS plastic.
Battery: 2 x CR2032 (included).
Battery life: Approx. 40-50 hours.

MACHINE ACCESSORIES

09.

315 MOULD SCREENS

316 EJECTOR COUPLINGS

320 MACHINE MOUNTS

321 LINEAR TRANSDUCER

323 HYDRAULIC ISO COUPLERS

Mould Screens

Tested up to 3 million cycles

Part No.	Mould Height	Max Width	
SG-1	200 mm	550 mm	1 (set of 2 pcs)
SG-2	300 mm	550 mm	1 (set of 2 pcs)
SG-3	400 mm	550 mm	1 (set of 2 pcs)
SG-4	500 mm	550 mm	1 (set of 2 pcs)
SG-5	600 mm	550 mm	1 (set of 2 pcs)

Prevent Plastic Parts scattering around the moulding machine with Scatterguard. The patented new design contains the Ejected Parts within the Mould Area whilst the roller blind action allows a completely unrestricted view of the Mould Face.
Scatterguard allows easy access to the mould with the Ultra Low Profile Design meaning that the mould screens can be installed even when there are lots of water connectors on the side of the mould.
Supplied as a kit Scatterguard is simply installed with Magnetic Anchors and is easily movable to other Moulding Machines.

- Ultra Low Profile Design.
- Crystal Clear Mould Screen.
- Reduce Scrap by Eliminating Contamination and Increase Profits.
- Ideal for Cleanroom Applications.

EJECTOR COUPLINGS

Description

The UKM is a mechanical ejector coupling for plastic injection moulding machines. Its function is to lock the ejector bars of the injection moulding tool.

- The coupling process "locking or unlocking" takes place in only seconds.
- Simple construction - easy to install
- Available with M10 – M12 and M16 thread.

Material:

Steel Type: 1.2510

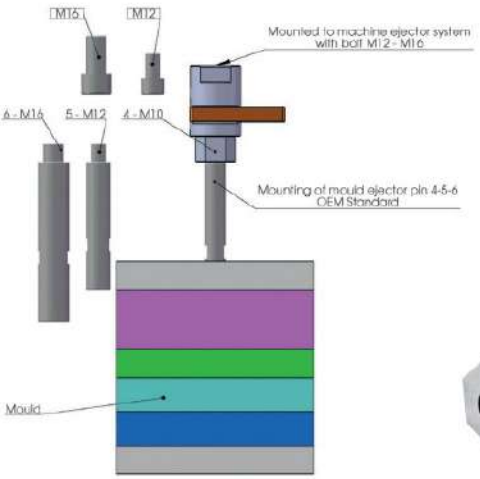

Connector Nipple

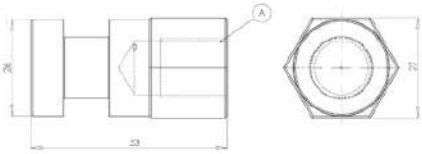

Part No.	A	
UKM10HAN	M10	1
UKM12HAN	M12	1
UKM16HAN	M16	1

Locking Slide

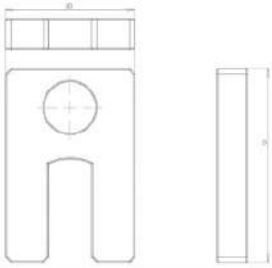

Part No.	SIZE	
UKKILE	ONE SIZE	1

Coupling

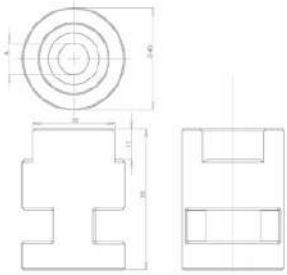

Part No.	A	
UKM12HUN	12	1
UKM16HUN	16	1

Ideal for use with: Quick Mould Change systems and Two-stage Ejection

Designed to provide a quick method of attaching the ejector plate in your mould to the ejection system in your moulding machine. Provides positive ejector plate return while greatly reducing set-up time.

Perfectly suited for those moulding machines where the ejector plate on the machine is difficult to reach. Ideal when center ejection is desired, but impossible to "tie-in". Works with either hydraulic or mechanical ejection.

Uses and Advantages

- Quick and easy installation (even on existing moulds). Return of the ejector plate is assured.
- Part ejector plate is assured.
- Coupling is obtained in any position, disconnecting is after the ejector plate is fully returned.
- Fast acting up to 30 strokes/minute. No wearing parts.
- Can be used on all injection machines equipped with hydraulic or mechanical ejection.
- Set-up time can be greatly reduced.
- Reduce noise on machines with mechanical knockouts. Especially suited for injection machines that do not have easy access to the ejector plate.
- Allows for center ejection to be tied in.
- No Grease should be applied to these Products.

Sequence of operation

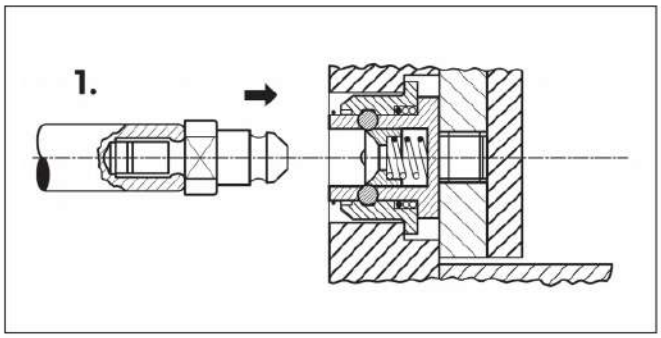

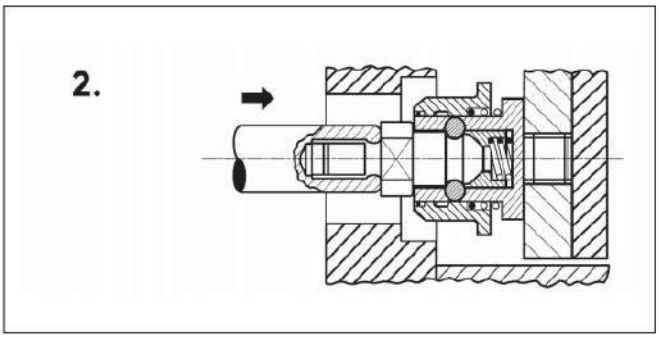

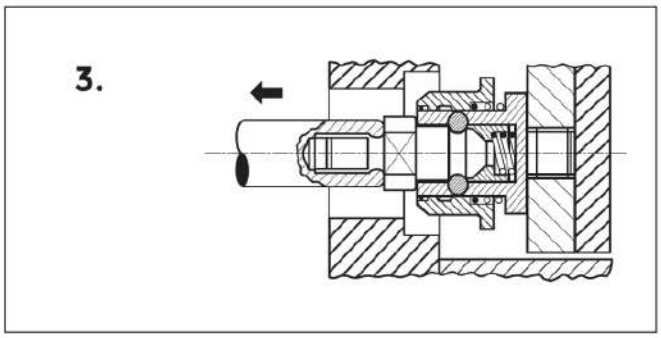

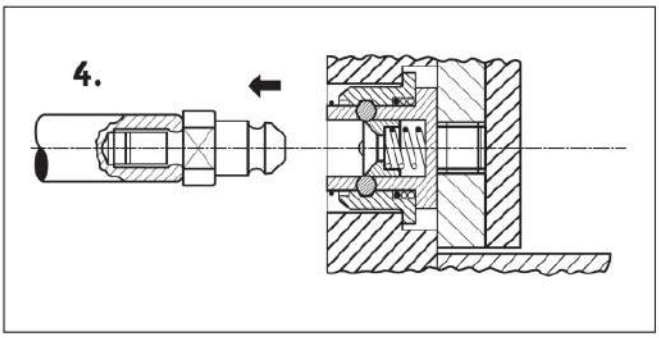

EJECTOR COUPLINGS

Ejector Coupling

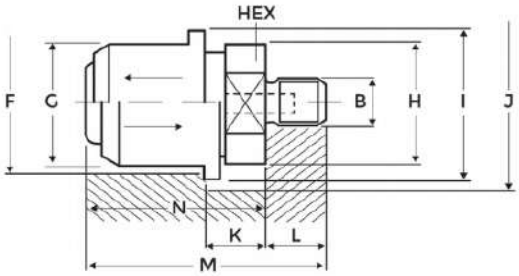

Part No.	B	F	G	H	I	J	K	L	M	Pull Force	Size	
EJC-F-1-1	M12X1,75	34	34	32	39	43	9	15	42,5	1500 kg	1	1
EJC-F-1-2	M16X1,5	34	34	32	39	43	9	15	42,5	1500 kg	1	1
EJC-F-1-3	M16X2	34	34	32	39	43	9	15	42,5	1500 kg	1	1
EJC-F-2-1	M16X1,5	40	40	38	48	53	13	15	52	2400 kg	2	1
EJC-F-2-2	M16X2	40	40	38	48	53	13	15	52	2400 kg	2	1
EJC-F-3-1	M16X1,5	58	58	56	65	70	17	18	68	3200 kg	3	1
EJC-F-3-2	M16X2	58	58	56	65	70	17	18	68	3200 kg	3	1
EJC-F-3-3	M18X1,5	58	58	56	65	70	17	18	68	3200 kg	3	1
EJC-F-3-4	M20X1,5	58	58	56	65	70	17	18	68	3200 kg	3	1
EJC-F-3-5	M20X2,5	58	58	56	65	70	17	18	68	3200 kg	3	1
EJC-F-3-6	M24X1,5	58	58	56	65	70	17	18	68	3200 kg	3	1
EJC-F-3-7	M27X1,5	58	58	56	65	70	17	18	68	3200 kg	3	1
EJC-F-3-8	M30X1,5	58	58	56	65	70	17	18	68	3200 kg	3	1

Material: 1.7147 - 60 HRC.

Pneumatic Ejector Coupling

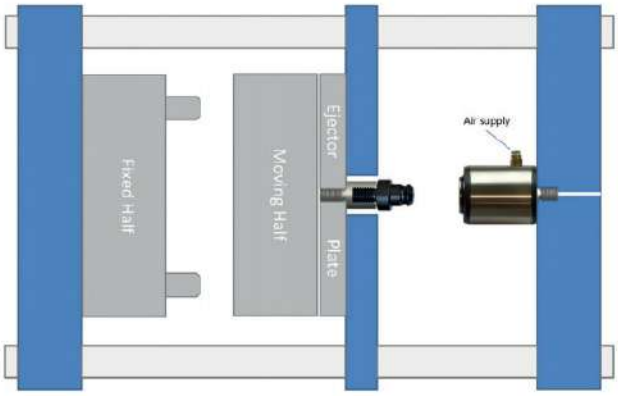

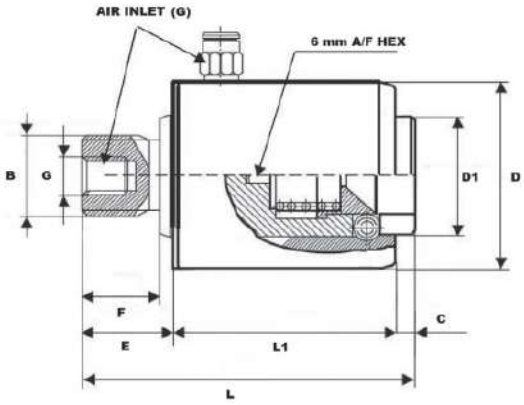

Part No.	D	D1	L	L1	E	F	B	G 4-6 Bar	Pull Force	Size	
EJC-FP-200	48	39	68	28,5	21	15	M16x2	R1/8"	2700 kg	2	1
EJC-FP-205	48	39	68	28,5	21	15	M18x1,5	R1/8"	2700 kg	2	1
EJC-FP-300	58	36	94	66	22,5	20	M20X1,5	R1/8"	3400 kg	3	1
EJC-FP-305	58	36	94	66	22,5	20	M20X2,5	R1/8"	3400 kg	3	1

Ejector Coupling to ensure rapid and safe mould changes designed to fit with standard EJC-M connectors.
The EJC-FP coupling is air operated. The coupling connects mechanical to the plug EJC-M, and disconnected using air in one of the 2 ports.
The Unit EJC-FP is installed on the machine and the plug EJC-M is installed on the mould/rod.

Ejector Nipple

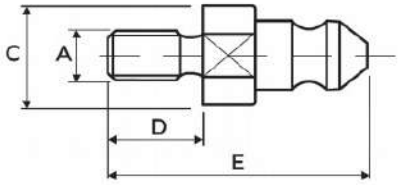

Part No.	A	C	D	E	Pull Force	Size	
EJC-M-1-1	M10X1,5	22,8	20	45,5	1500 kg	1	1
EJC-M-1-2	M12X1,75	22,8	20	45,5	1500 kg	1	1
EJC-M-1-3	M14X2	22,8	20	45,5	1500 kg	1	1
EJC-M-1-4	M16X2	22,8	20	45,5	1500 kg	1	1
EJC-M-2-1	M10X1,5	25,8	20	55	2400 kg	2	1
EJC-M-2-2	M12X1,75	25,8	20	55	2400 kg	2	1
EJC-M-2-3	M14X2	25,8	20	55	2400 kg	2	1
EJC-M-2-4	M16X2	25,8	20	55	2400 kg	2	1
EJC-M-3-1	M16X2	35	25	68	3200 kg	3	1
EJC-M-3-2	M18X2,5	35	25	68	3200 kg	3	1
EJC-M-3-3	M20X2,5	35	25	68	3200 kg	3	1
EJC-M-3-4	M24X3	35	25	68	3200 kg	3	1
EJC-M-3-5	M27X3	35	25	68	3200 kg	3	1
EJC-M-3-6	M30X3,5	35	25	68	3200 kg	3	1

Material: 1.7147 - 60 HRC.

MACHINE MOUNTS

Standard Machine Mounts - Supplied with Adjusting Screws

Part No.	Diameter	Load (kg)	Adjusting Screw	Height	
SMM01	80mm	200 kg	M12x1.25x120	38-50mm	1
SMM02	120mm	400 kg	M16x1.5x120	46-59mm	1
SMM03	160mm	1000 kg	M20x1.5x170	53-68mm	1
SMM04	160mm	2500 kg	M20x1.5x170	54-69mm	1
SMM05	200mm	3800 kg	M20x1.5x170	56-71mm	1

Up to 15 mm Adjustment.
Galvanised Steel Finish.
Supplied Complete with Adjusting Screw.

Transducer with Rod

Technical data	
Measurement Stroke	30 to 1250 mm
Linearity	± %0,05
Repeatability	< 0,01 mm
Resolution	Infinite
Resistance	5 kOhm
Resistance Tolerance	±%20
Load Resistance	100 kOhm min.
Recommended Cursor Current	< 1 μA
Permissible Applied Voltage	28VDC max.
Electrical Connections	4 pole hydraulic type connector
Displacement Speed	<5 m/s
Mechanical Life	100 million cycles
Case Dimensions	33 mm x 33 mm
Case Material	Anodized aluminium
Rod Material	Stainless Steel
Rod Diameter	Ø 6 mm
Mechanical Fixing	Variable brackets
IP Degree	IP 65
Operating Temperature	-20°C ... +80°C
Storage Temperature	-30°C ... +90°C

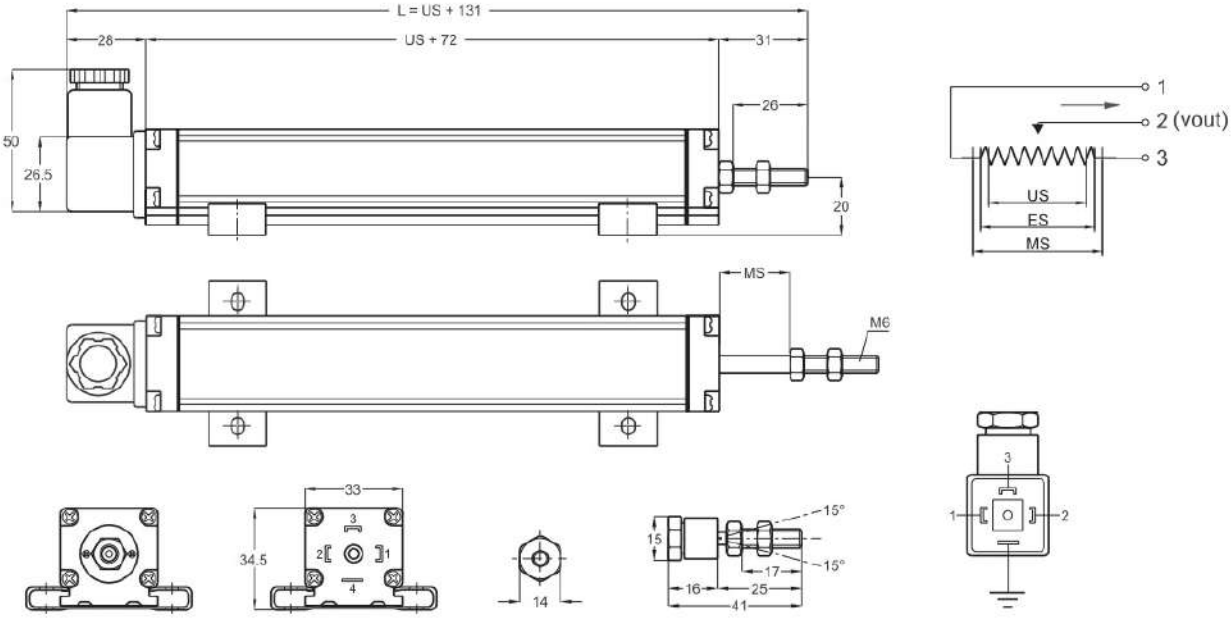

Part No.	US (usefull stroke)	MS (Mechanical stroke)	L (total length)	
MPT100	100	103	231	1
MPT150	150	153	281	1
MPT175	175	178	306	1
MPT200	200	203	331	1
MPT300	300	303	431	1
MPT400	400	403	531	1
MPT500	500	503	631	1

Transducer without Rod

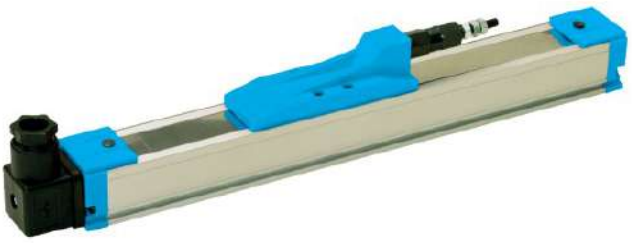

Technical data	
Measurement Stroke	100 to 1500 mm
Linearity	± %0,05
Repeatability	< 0,01 mm
Resolution	Infinite
Resistance	5 kOhm
Resistance Tolerance	±%20
Load Resistance	100 kOhm min.
Recommended Cursor Current	< 1 μA
Permissible Applied Voltage	28VDC max.
Electrical Connections	4 pole hydraulic type connector
Displacement Speed	<1,5 m/s
Mechanical Life	100 million cycles
Case Dimensions	33 mm x 33 mm
Case Material	Anodized aluminium
Mechanical Fixing	Variable brackets
IP Degree	IP 40 /If mounted upside down IP 53
Operating Temperature	-20°C ... +80°C
Storage Temperature	-30°C ... +90°C

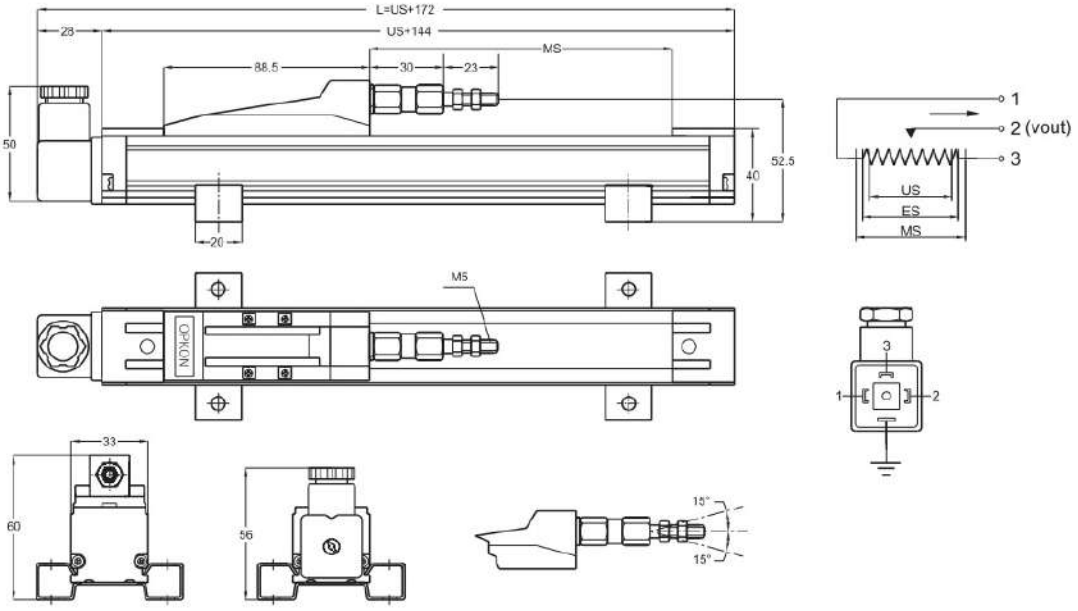

Part No.	US (usefull stroke)	MS (Mechanical stroke)	L (total length)	
MPH150	150	154	322	1
MPH200	200	204	372	1
MPH225	225	229	397	1
MPH300	300	304	472	1
MPH400	400	404	572	1
MPH500	500	504	672	1

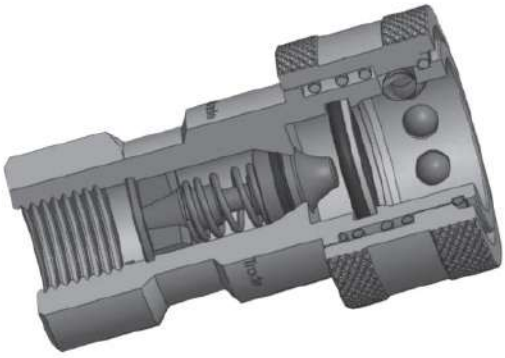

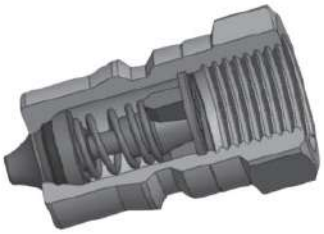

ISO A Couplers

Part No.	Thread size	Pressure Bar	
FISO-A14BSP	1/4" BSP	350	1
FISO-A38BSP	3/8" BSP	300	1
FISO-A12BSP	1/2" BSP	250	1
FISO-A34BSP	3/4" BSP	250	1
FISO-A100BSP	1" BSP	230	1

ISO A Plugs

Part No.	Thread size	Pressure Bar	
MISO-A14BSP	1/4" BSP	350	1
MISO-A38BSP	3/8" BSP	300	1
MISO-A12BSP	1/2" BSP	250	1
MISO-A34BSP	3/4" BSP	250	1
MISO-A100BSP	1" BSP	230	1

Material:
Steel (plated).

ISO B Couplers

Part No.	Thread size	Pressure Bar	
FISO-B14BSP	1/4" BSP	350	1
FISO-B38BSP	3/8" BSP	300	1
FISO-B12BSP	1/2" BSP	250	1

ISO B Plugs

Part No.	Thread size	Pressure Bar	
MISO-B14BSP	1/4" BSP	350	1
MISO-B38BSP	3/8" BSP	300	1
MISO-B12BSP	1/2" BSP	250	1

Material:
Steel (plated).

MOULD CLAMPING

10.

325 POWER CLAMPS

327 MECHANICAL CLAMPS

329 NUTS & WASHERS

330 STRAIGHT STUDS

331 T-NUTS

Power Sliding Clamp – Supplied without Inbus Bolt

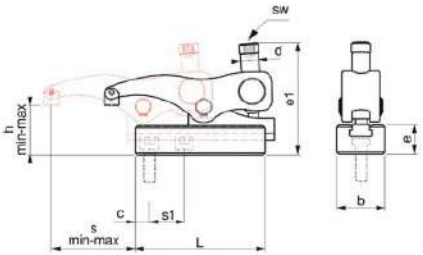

Part No.	Inbus Bolt Size (m) (not included)	h-Min	h-Max	s	e1	d	sw	L	e	b	c	"Clamping force Kgf"	
SC-100	M10-M12	0	50	12-66	100	M14	8	104	35,5	38	13	1600	1
SC-200	M12-M16	0	60	15-83	113	M18	10	128	38	48	16	2000	1
SC-250	M16-M20	0	65	18-96	125	M20	12	140	42	55	18	2500	1
SC-300	M20-M24	20	80	22-95	175	M24	12	178	55	74	24	5500	1

Used to facilitate quicker mould changes the Power Sliding Clamp offers an incredibly cost effective solution.
Features:
- Can accommodate a range of different back-plate sizes and thicknesses
- Perfect for clamping of injection moulds
- Use in threaded platens or t-slot platens
- Clamp slides by virtue of Integral t-slot

Inbus Bolt For Power Clamps

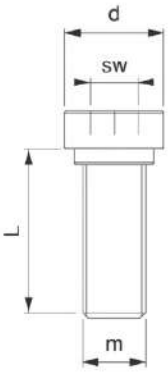

Part No.	m	L	d	SW	Clamp Ref	
1120-310	M10	29	16,5	8	SC-100	1
1120-312	M12	29	16,5	8	SC-100	1
1130-412	M12	30	20,5	10	SC-200	1
1130-416	M16	34	20,5	10	SC-200	1
1150-516	M16	34	24,5	12	SC-250	1
1150-518	M18	38	24,5	12	SC-250	1
1150-520	M20	38	24,5	12	SC-250	1
1160-620	M20	45	34	12	SC-300	1
1160-624	M24	45	34	12	SC-300	1
1160-724	M24	55	34	12	SC-300	1

Material: 41 Cr 4 DIN
Quality: 10.9
Surface: Black Coating

T-Nut For Inbus Bolt

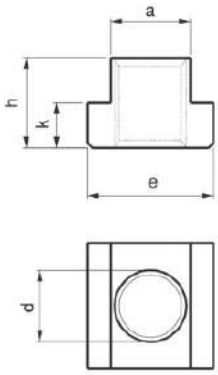

Part No.	D x Nut	a	e	h	k	
508-10x12	M10X12	11,7	18	14	7	1
508-12x14	M12X14	13,7	22	16	8	1
508-12x16	M12X16	15,7	25	18	9	1
508-12x18	M12X18	17,7	28	20	10	1
508-16x20	M16X20	19,7	32	24	12	1
508-16x22	M16X22	21,7	35	28	14	1
508-16x24	M16X24	23,7	40	32	16	1
508-16x28	M16X28	27,7	44	36	18	1
508-20x22	M20X22	21,7	35	28	14	1
508-20x24	M20X24	23,7	40	32	16	1
508-24x28	M24X28	27,7	44	36	18	1
508-24x36	M24X36	35,6	54	44	22	1

Clamp Calculation Guide

Power Clamp For Injection Moulding

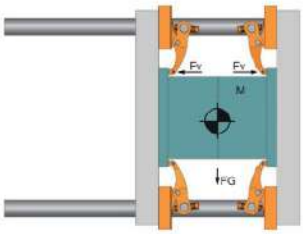

Formula Calculator

$\frac{M \times FG}{1000} = kN$	$\frac{2500 \text{ kg} \times 9.81}{1000} = 24.52 \text{ kN}$
$\frac{kN}{\mu} = \text{Result}$	$\frac{24.52}{0.14} = 175.14 \text{ kN}$
$\frac{\text{Result}}{Fv} = \text{Number of Clamp}$	$\frac{175.14 \text{ kN}}{25 \text{ kN}} = 7 \text{ Clamp}$ (use 8 pcs)

Power Clamp For Press Moulding

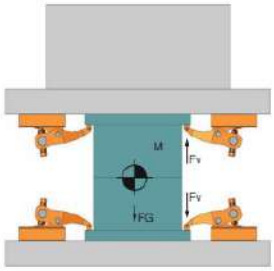

Formula Calculator

$\frac{M \times FG}{1000} = kN$	$\frac{5000 \text{ kg} \times 9.81}{1000} = 49.050 \text{ kN}$
$\frac{kN}{\mu} = \text{Result}$ (upper %60) (lower % 40)	$\frac{49.05}{0.14} = 350.35 \text{ kN}$ (% 60 upper = 210.21) (% 40 lower = 140.14)
$\frac{\text{Result}}{Fv} = \text{Number of Clamp}$	$\frac{210.21 \text{ kN (upper)}}{25 \text{ kN}} = 8 \text{ Number of Clamp}$
$\frac{\text{Result}}{Fv} = \text{Number of Clamp}$	$\frac{140.14 \text{ kN (lower)}}{25 \text{ kN}} = 5.6 \text{ Clamp}$ (use 6 pcs)

Force Diagram

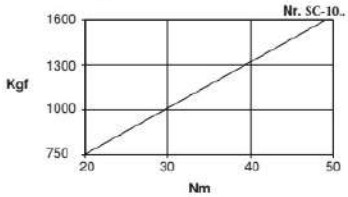

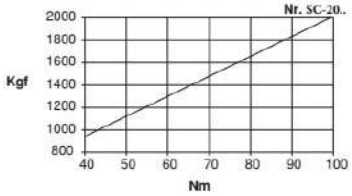

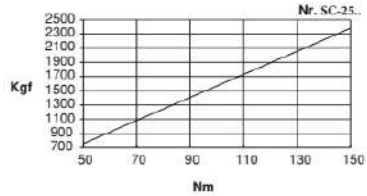

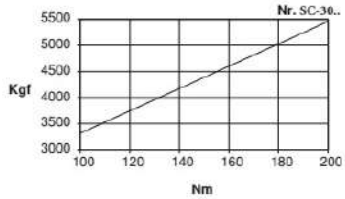

S-Clamp

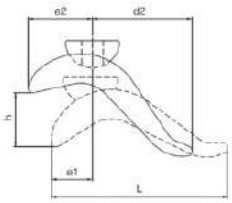

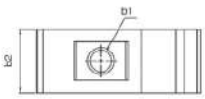

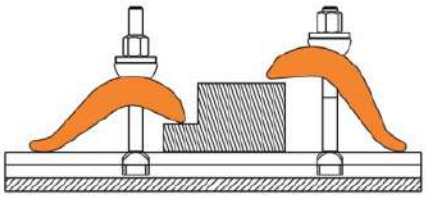

Part No.	b1	For Clamp Screw	b2xL	d	e1	e2	h	Weight (g)	
S200-17	17	M12-M16	50x140	60	30	55	75	900	1
S200-21	21	M20	60x175	80	40	70	85	1600	1

Materials:
Forged Steel, Hardened, Zinc Coated

Stepped Clamp

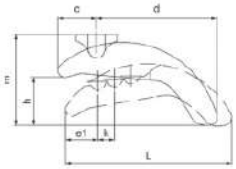

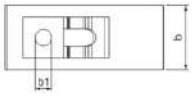

Part No.	b1	For Clamp Screw	m	h	b x L	c	d	e1	k x3	Weight (Kg)	
SP200-17	17	M16	93	15-50	65x165	39	128	30	17	2,1	1
SP200-21	21	M20	111	20-65	75x189	43	146	33	19	3,2	1
SP200-25	25	M24	126	20-75	85x213	49	164	39	21	4,5	1
SP200-31	31	M30	143,5	20-85	95x238	56	182	46	23	6,3	1

Supportless Clamp for clamping hights 15-85 mm.

Materials:
Forged Steel, Hardened, Zinc Coated

"Crocodile" Clamp - Double Sided

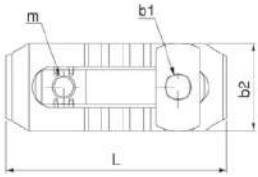

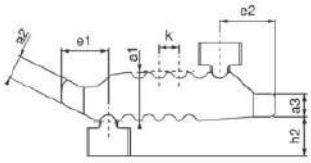

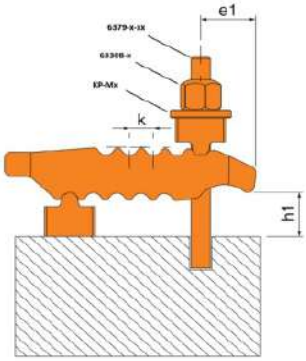

Part No.	b1	For Clamping Screw	M	a1	a2	a3	h2	k	b2	L	b3	h1	e1	e2	kgf (force)	Weight (g)	
C200-13	13	M10-M12	M12	27	12,5	12	21	11	44	115	30	0-55	25	30	3000	506	1
C200-17	17	M12-M16	M16	36	18	17	23	12	55	150	41	0-70	35	36	4000	1382	1
C200-21	21	M16-M20	M20	42	25	20	32,5	14	63	187	30	0-80	44	44	6000	2241	1
C200-25	25	M20-M24	M20	51	36,5	24	34	17	70	235	30	0-100	60	47	7500	3550	1

Materials:
Forged Steel, Hardened, Black Coating

MECHANICAL CLAMPS

Straight Clamp with Support Hole - Supplied without Adjusting Screw

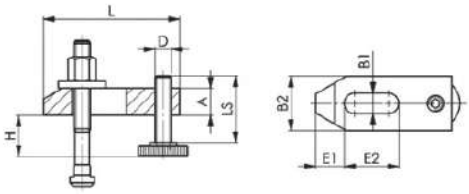

Part No.	Nut	DIN6314 B1xL	D	A	B2	E1	E2	
1330-11x80	10	11x80	M10	15	30	15	30	1
1330-14x100	12+14	14x100	M12	20	40	21	40	1
1330-14x125	12+14	14x125	M12	20	40	21	50	1
1330-18x125	16+18	18x125	M16	25	50	26	45	1
1330-18x160	16+18	18x160	M16	25	50	26	65	1
1330-22x160	20+22	22x160	M20	30	60	30	60	1
1330-22x200	20+22	22x200	M20	30	60	30	80	1
1330-26x160	24+26	26x160	M24	30	70	35	60	1
1330-26x200	24+26	26x200	M24	35	70	35	80	1
1330-26x250	24+26	26x250	M24	35	70	35	100	1
1330-26x315	24+26	26x315	M24	40	70	35	100	1
1330-33x315	30+33	33x315	M24	50	80	45	130	1
1330-43x400	36+43	43x400	M30	60	100	100	150	1

Adjusting Screw

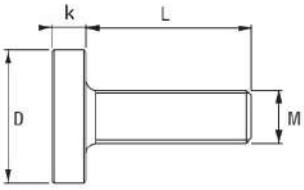

Part No.	M	L	D	K	
1490-10x42	M10	42	30	8	1
1490-12x50	M12	50	36	10	1
1490-12x95	M12	95	36	10	1
1490-16x62	M16	62	45	13	1
1490-16x97	M16	97	45	13	1
1490-16x117	M16	117	45	13	1
1490-20x62	M20	62	50	13	1
1490-20x97	M20	97	50	13	1
1490-20x117	M20	117	50	13	1
1490-24x81	M24	81	50	14	1
1490-24x116	M24	116	50	14	1
1490-30x180	M30	18	70	24	1

Material: Ck45 DIN.
Black Coating.

Hexagon Nut

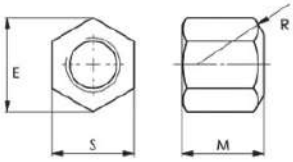

Part No.	Size	E	M	R	S	
6330B-6	M6	11,5	9	9	10	1
6330B-8	M8	15	12	12	13	1
6330B-10	M10	19,6	15	15	17	1
6330B-12	M12	21,9	18	17	19	1
6330B-14	M14	25,4	21	20	22	1
6330B-16	M16	27,7	24	22	24	1
6330B-18	M18	31,2	27	24	27	1
6330B-20	M20	34,6	30	27	30	1
6330B-22	M22	36,9	33	30	32	1
6330B-24	M24	41,5	36	32	36	1
6330B-30	M30	53,1	45	41	46	1
6330B-36	M36	63,5	54	50	55	1

Hexagon Nut DIN 6330B.
Material: Ck45 DIN.
Hardness: 30-32 HRC.
Black Coating.

Thick Washer

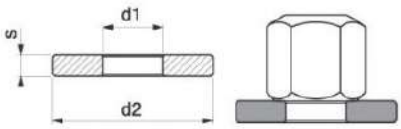

Part No.	d1	Thread to fit	d2	s	
KP-M6	6,4	M6	17	3	1
KP-M8	8,4	M8	23	4	1
KP-M10	10,5	M10	28	4	1
KP-M12	13	M12	35	5	1
KP-M14	15	M14	40	5	1
KP-M16	17	M16	45	6	1
KP-M18	19	M18	45	6	1
KP-M20	21	M20	50	6	1
KP-M22	23	M22	50	8	1
KP-M24	25	M24	60	8	1
KP-M30	31	M30	68	10	1

Ideal for Mould Clamping.

STRAIGHT STUDS

Straight Stud

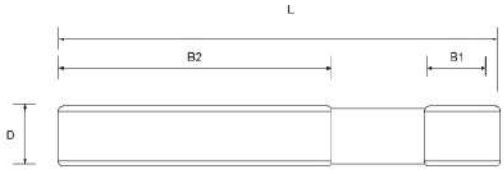

Part No.	D x L	B1	B2	
6379-8x40	M 8x 40	11	20	1
6379-8x63	M 8x 63	11	40	1
6379-8x80	M 8x 80	11	50	1
6379-8x100	M 8x100	11	63	1
6379-8x125	M 8x125	11	75	1
6379-8x160	M 8x160	11	100	1
6379-10x50	M10x 50	13	25	1
6379-10x80	M10x 80	13	50	1
6379-10x100	M10x100	13	75	1
6379-10x125	M10x125	13	75	1
6379-10x160	M10x160	13	100	1
6379-10x200	M10x200	13	125	1
6379-12x50	M12x 50	15	25	1
6379-12x63	M12x 63	15	32	1
6379-12x80	M12x 80	15	50	1
6379-12x100	M12x100	15	63	1
6379-12x125	M12x125	15	75	1
6379-12x160	M12x160	15	100	1
6379-12x200	M12x200	15	125	1
6379-14x63	M14x 63	17	32	1
6379-14x80	M14x80	17	50	1
6379-14x100	M14x100	17	63	1
6379-14x125	M14x125	17	75	1
6379-14x160	M14x160	17	100	1
6379-14x200	M14x200	17	125	1
6379-14x250	M14x250	17	160	1
6379-16x63	M16x 63	19	32	1
6379-16x80	M16x 80	19	50	1
6379-16x100	M16x100	19	63	1
6379-16x125	M16x125	19	75	1
6379-16x160	M16x160	19	100	1
6379-16x200	M16x200	19	125	1
6379-16x250	M16x250	19	160	1
6379-16x315	M16x315	19	180	1
6379-16x500	M16x500	19	315	1
6379-18x80	M18x 80	23	50	1
6379-18x125	M18x125	23	75	1
6379-18x160	M18x160	23	100	1
6379-18x200	M18x200	23	125	1
6379-18x250	M18x250	23	150	1

Part No.	D x L	B1	B2	
6379-18x315	M18x315	23	180	1
6379-20x80	M20x 80	27	32	1
6379-20x125	M20x125	27	70	1
6379-20x160	M20x160	27	100	1
6379-20x200	M20x200	27	125	1
6379-20x250	M20x250	27	160	1
6379-20x315	M20x315	27	200	1
6379-20x400	M20x400	27	250	1
6379-20x500	M20x500	27	315	1
6379-22x100	M22x100	31	45	1
6379-22x160	M22x160	31	100	1
6379-22x200	M22x200	31	125	1
6379-22x250	M22x250	31	160	1
6379-22x315	M22x315	31	180	1
6379-22x400	M22x400	31	250	1
6379-24x100	M24x100	35	45	1
6379-24x125	M24x125	35	70	1
6379-24x160	M24x160	35	100	1
6379-24x200	M24x200	35	125	1
6379-24x250	M24x250	35	160	1
6379-24x315	M24x315	35	200	1
6379-24x400	M24x400	35	250	1
6379-24x500	M24x500	35	315	1
6379-24x630	M24x630	35	315	1
6379-30x125	M30x125	43	56	1
6379-30x200	M30x200	43	125	1
6379-30x315	M30x315	43	200	1
6379-30x500	M30x500	43	315	1
6379-30x700	M30x700	43	400	1
6379-30x1000	M30x1000	43	400	1
6379-36x160	M36x160	51	80	1
6379-36x200	M36x200	51	125	1
6379-36x250	M36x250	51	160	1
6379-36x315	M36x315	51	200	1
6379-36x400	M36x400	51	250	1
6379-36x500	M36x500	51	315	1
6379-36x700	M36x700	51	400	1
6379-42x315	M42x315	59	200	1
6379-42x400	M42x400	59	250	1
6379-42x500	M42x500	59	315	1

Material: 41 Cr 4 DIN.
Quality 10.9.
Black Coating.

T-Nut

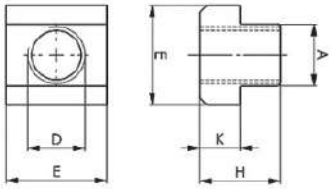

Part No.	D x Nut	A	E	H	K	
508-6x8	M 6x 8	7,7	13	10	6	1
508-8x10	M 8x10	9,7	15	12	6	1
508-8x12	M 8x12	11,7	18	14	7	1
508-10x12	M10x12	11,7	18	14	7	1
508-8x14	M 8x14	13,7	22	16	8	1
508-10x14	M10x14	13,7	22	16	8	1
508-12x14	M12x14	13,7	22	16	8	1
508-8x16	M 8x16	15,7	25	18	9	1
508-10x16	M10x16	15,7	25	18	9	1
508-12x16	M12x16	15,7	25	18	9	1
508-14x16	M14x16	15,7	25	18	9	1
508-8x18	M 8x18	17,7	28	20	10	1
508-10x18	M10x18	17,7	28	20	10	1
508-12x18	M12x18	17,7	28	20	10	1
508-14x18	M14x18	17,7	28	20	10	1
508-16x18	M16x18	17,7	28	20	10	1
508-16x20	M16x20	19,7	32	24	12	1
508-18x20	M18x20	19,7	32	24	12	1
508-16x22	M16x22	21,7	35	28	14	1
508-18x22	M18x22	21,7	35	28	14	1
508-20x22	M20x22	21,7	35	28	14	1
508-16x24	M16x24	23,7	40	32	16	1
508-20x24	M20x24	23,7	40	32	16	1
508-22x24	M22x24	23,7	40	32	16	1
508-16x28	M16x28	27,7	44	36	18	1
508-20x28	M20x28	27,7	44	36	18	1
508-22x28	M22x28	27,7	44	36	18	1
508-24x28	M24x28	27,7	44	36	18	1
508-24x36	M24x36	35,6	54	44	22	1
508-30x36	M30x36	35,6	54	44	22	1

T-Clamp DIN 508.
Material: Ck45 DIN.
Hardness: 30-32 HRC.
Black Coating.

LIFTING

11.

333 LIFTING POINTS

334 SUPER LIFTING POINTS

335 EYE BOLTS AND SHACKLES

337 LIFTING CHAIN SLINGS

Now with NFC Inspection Chip

The SAP, SLP and KEP lifting points are equipped with NFC/RFID inspection Chip.

Access and update safety inspection procedures with your Smart-Phone. Scan the Chip on the lifting point and get all relevant data to ensure safety inspection compliance.

Free APP for iPhone and Android.

Swivel Anchor Point SAP

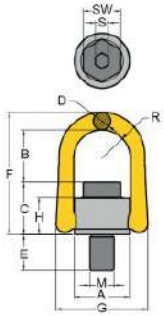

Part No.	W.L.L. (t)	Thread			Dimensions										Torque in	Weight
		M(mm)	E (mm)	Pich(DIN13)	A	B	C	D	F	G	H	R	S	SW	Nm	Kg.
SAP-M8	0.5	M8	12	1.25	33	42	28	11	80	58	23	17	6	13	30	0.3
SAP-M10	0.7	M10	15	1.5	33	41	29	11	80	58	23	17	6	17	60	0.3
SAP-M12	1.0	M12	20	1.75	33	40	31	11	80	58	23	17	8	19	100	0.3
SAP-M16	2.0	M16	24	2	50	54	46	17	117	90	36	27	10	24	150	0.9
SAP-M20	3.0	M20	30	2.5	50	52	49	17	117	90	36	27	12	30	250	1.0
SAP-M24	5.0	M24	36	3	72	81	59	25	163	125	44	37	14	36	400	2.6
SAP-M27	5.6	M27	38	3	87	86	79	30	204	148	62	46	17	41	400	4.9
SAP-M30	7.8	M30	48	3.5	87	94	81	30	204	148	62	46	17	46	500	5.0
SAP-M36	12.5	M36	54	4	110	112	98	36	247	188	75	57	22	55	1000	9.6
SAP-M42	15.6	M42	63	4.5	110	101	108	36	247	188	83	57	24	65	1500	10.9
SAP-M48	20.0	M48	72	5	110	97	113	36	248	188	83	57	27	75	2000	11.6
SAP-M56	22.0	M56	84	5.5	123	116	121	36	274	202	91	64	27	85	2100	15.0
SAP-M64	22.5	M64	100	6	123	111	126	36	274	202	91	64	32	95	2200	16.3

- Rotates through 360° and pivots 180°, and simultaneously allows lifting from any direction.
- Manufactured from forged alloy steel, quenched and tempered.
- Manufactured and tested in accordance with EN1677-1.
- Load rated parts are 100% magnaflux crack detected.
- Individual forged parts and cap screw are traceable to Test Certification.
- Bolts are Metric thread (ASME / ANSI B18.3.1M), specification is alloy socket head screw per DIN EN ISO 4762.
- Proof tested to 2.5 times the WLL.
- Fatigue rated to 20.000 cycles at 1.5 times the WLL.
- All YOKE Lifting points meet or exceed all the requirements of ASME B30.26.
- Quick and simple assembly, just a tapped hole is required.

SUPER LIFTING POINTS

Swivel Lifting Point SLP

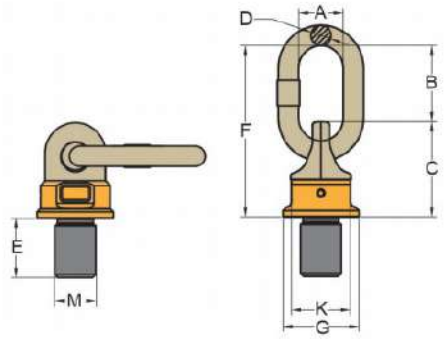

Part No.	Working Load Tonnes	Thread			Dimensions							Torque in Nm	Weight Kg.
		M(mm)	E (mm)	Pich(DIN13)	G	C	K	F	D	B	A		
SLP-M8	0.3	M8	12	1.25	36.5	48	34	101	13	53	35	10-40	0.3
SLP-M10	0.5	M10	18	1.5	36.5	48	34	101	13	53	35	10-40	0.4
SLP-M12	0.7	M12	18	1.75	36.5	48	34	101	13	53	35	15-40	0.4
SLP-M16	1.4	M16	20	2	36.5	48	34	101	13	53	35	45-130	0.44
SLP-M20	2.5	M20	30	2.5	52	68	46	127	16	59	35	100-170	1.0
SLP-M24	4.0	M24	30	3	57	75	50	148	19	73	40	190-280	1.5
SLP-M30	6.7	M30	35	3.5	70	95	65	163	19	68	40	230-400	2.4
SLP-M36	10.0	M36	50	4	81	106	75	201	22	95	50	270-600	3.8
SLP-M42	12.5	M42	50	4.5	81	106	75	201	22	95	50	270-700	3.9
SLP-M48	12.5	M48	72	5	81	106	75	201	22	95	50	270-700	4.4
SLP-M56	18	M56	78	5.5	104	127	95	256	32	129	70	350-900	8.1
SLP-M64	20	M64	110	6	104	127	95	256	32	129	70	350-900	9.3

- Pivots to 230°, rotates through 360° due to its unique ball bearing design. Design factor 4:1 in all directions.
- Manufactured from forged alloy steel, quenched and tempered.
- Manufactured and tested in accordance with EN1677-1.
- Certified by DGUV GS-OA-15-04.
- Load rated parts are 100% magnaflux crack detected.
- Individual forged parts and batch code links to Test Certificate sheet.
- Bolt are Metric thread (ASME / ANSI B18.3.1M).
- Proof tested to 2.5 times the WLL.
- Fatigue rated to 1.5 times the WLL.
- All YOKE Super points meet or exceed all the requirements of ASME B30.26.
- Easy to attach or dismantle due to the forged hexagon shaped body of the Super Point.
- Capable of rotating under load. Do not turn continuously in 90 degree direction at full load.

Key Eye Point KEP

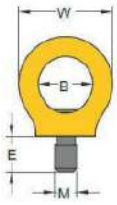

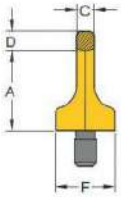

Part No.	W.L.L. (t) x (z)	Bolt Size	A	B	C	D	E	F	W	S	Mass Kg
KEP-M8	0.40 (1)	M8 X 1.5	36	25	8	9	12	25	44	6	0.1
KEP-M10	0.40 (1)	M10 x 1.50	36	25	8	9	15	25	44	6	0.1
KEP-M12	0.75 (2)	M12 x 1.75	45	30	10	11	18	33	52	8	0.2
KEP-M16	1.50 (4)	M16 x 2.00	52	35	14	13	24	35	61	10	0.3
KEP-M20	2.30 (6)	M20 x 2.00	60	40	16	15	30	44	70	12	0.6
KEP-M24	3.20 (8)	M24 x 3.00	72	48	19	18	36	52	84	14	1.0
KEP-M30	4.50 (12)	M30 x 3.50	90	60	24	22	45	60	105	17	1.8
KEP-M36	7.00 (16)	M36 x 4.00	109	72	29	27	54	76	126	22	3.2
KEP-M42	9.00 (24)	M42 x 4.50	123	82	34	32	63	88	147	24	5.0
KEP-M48	12.00 (32)	M48 x 5.00	144	94	38	37	72	104	168	27	7.6
KEP-M56	16.00 (34)	M56 x 5.50	147	102	40	43	84	124	178	27	9.2
KEP-M64	18.00 (36)	M64 X 6.00	147	102	40	43	95	130	178	27	10.0

- Rotates through 360° adjustable in the direction of the load.
- Manufactured from alloy steel, quenched and tempered.
- Manufactured and tested in accordance with EN1677-1.
- Load rated parts are 100% magnaflux crack detected.
- Individual forged parts and cap screw are traceable to Test Certification.
- Bolts are Metric thread (ASME / ANSI B18.3.1M),specification is alloy socket head screw per DIN EN ISO 4762.
- Proof tested to 2.5 times the WLL.
- Fatigue rated to 20,000 cycles at 1.5 times theWLL.
- All YOKE Lifting points meet or exceed all the requirements of ASME B30.26.
- Quick and simple assembly, just a tapped hole is required.

Lifting Eyebolts - Zinc Electroplated DIN 580

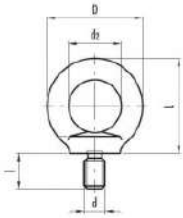

Part No.	d	l	D	d2	L	WLL	
EBGM8	M8	13	36	20	36	140kg	1
EBGM10	M10	17	45	25	45	230kg	1
EBGM12	M12	20	54	30	53	340kg	1
EBGM16	M16	27	63	35	62	700kg	1
EBGM20	M20	30	72	40	71	1200kg	1
EBGM24	M24	36	90	50	90	1800kg	1
EBGM30	M30	45	108	60	109	3600kg	1
EBGM36	M36	54	126	70	128	5100kg	1
EBGM42	M42	63	144	80	147	7000kg	1
EBGM48	M48	68	160	90	168	8600kg	1

Eyebolts/eyenuts to this standard are intended as permanent attachments on equipment.
Material: Steel C15E.
Marking: According to standard, WLL, manufacturer C15, thread, CE.
Finish: Electro galvanized.
Standard: DIN 580.

Note: The lifting eyes shall be screwed tight against the surface. When two lifting eyes are used their mutual position shall result in the two eyes at the same level. Larger angle between the slings than 90° are not tolerated. Lifting eyes can not be assembled against a surface that differs essentially from a surface perpendicular to the direction of the lift.
Safety factor: 6:1.

Alloy Steel Bow Shackles - Galvanised

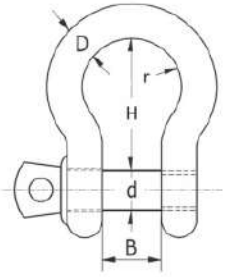

Part No.	Dim	B	d	H	r	WLL	
ASBSG11	3/8" x 7/16"'	17mm	11mm	37mm	26mm	1000kg	1
ASBSG13	7/16" x 1/2"	18mm	13mm	43mm	29mm	1500kg	1
ASBSG16	1/2" x 5/8"	21mm	16mm	48mm	33mm	2000kg	1
ASBSG19	5/8" x 3/4"	27mm	19mm	60mm	43mm	3250kg	1
ASBSG22	3/4" x 7/8"	32mm	22mm	71mm	51mm	4750kg	1
ASBSG25	7/8" x 1"	37mm	25mm	84mm	58mm	6500kg	1
ASBSG28	1" x 1 1/8"	43mm	28mm	95mm	68mm	8500kg	1
ASBSG32	1 1/8" x 1 1/4"	46mm	32mm	104mm	75mm	9500kg	1
ASBSG35	1 1/4" x 1 3/8"	52mm	36mm	119mm	82mm	12000kg	1

Mouldpro bow type shackle is a high quality shackle intended for use in demanding environments.
It is supplied with a screw pin for quick and easy opening.
Material: Forged alloy steel, supplied with alloy screw pin.
Marking: According to standard, CE-marked, WLL, size and grade
Temperature range: -20°C up to +200°C.
Finish: All parts hot dip galvanized. Bolt additional powder painted.
Standard: EN 13889.
Safety factor: 6:1.
Grade: 6.

Lifting Chain Slings

Features

Mouldpro offers best solutions which can adjust the length of Chain Sling serving for unsymmetric lengths with convenience and functionality.
Also with following features.

Light weight but heavy duty system, extreme wear resistance and longer life than traditional components.

- Cost effective compared to conventional slings using multiple components.
- Product designed according to EN1677 and PAS 1061, tested according to GS-OA-15-05.
- Each component is Proof Load tested at 2.5 times the WLL with certification for each sling.
- Each component is Fatigue Rated to 20,000 cycles at 1.5 times the WLL.
- Each component is marked with batch number that links to the test certificate with full traceability to raw material.
- Fully integrated shortening clutch and master link.
- No reduction in WLL when shortening chain.
- Replacement parts available worldwide.
- Equipped with NFC/RFID Inspection Chip

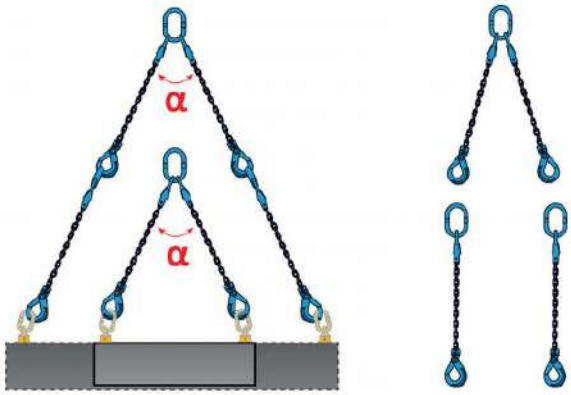

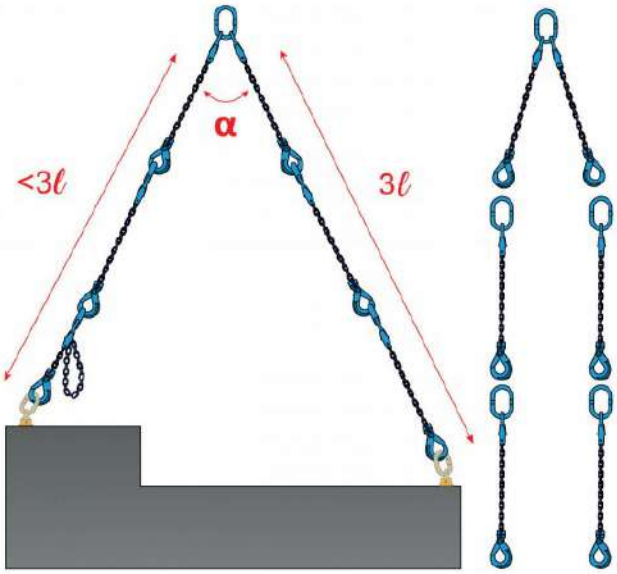

LIFTING CHAIN SLINGS

Sling with 1 Chain

Part No.	WLL Tonnes*	Dimensions (mm)				L (M)	N.W. KG
		Chain Size	A	B	P		
LCS-1-08	2.5	8	160	95	27	3	10.8
LCS-1-10	4.0	10	170	105	34	3	18.0

* Design factor 4:1 for components in accordance with PAS1061.

Sling with 2 Chains

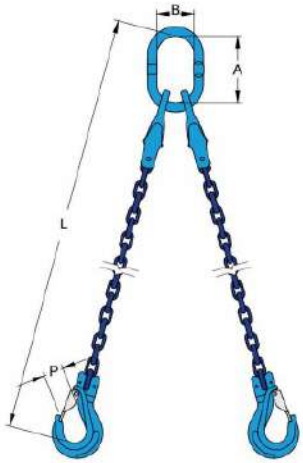

Part No.	Working Load Tonnes		Dimensions (mm)				L (M)	N.W. KG
	β 0-45° α 0-90°	β 45-60° α 90-120°	Chain Size	A	B	P		
LCS-2-08	3.5	2.5	8	160	95	27	3	10.8
LCS-2-10	5.6	4.0	10	170	105	34	3	18.0

* Design factor 4:1 for components in accordance with PAS1061.

Sling with 4 Chains

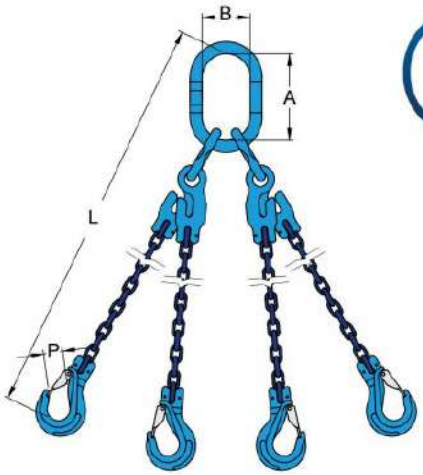

Part No.	Working Load Tonnes β 0-45° α 0-90°	Working Load Tonnes β 45-60° α 90-120°	Dimensions (mm) Chain Size	A	B	P	L (M)	N.W. KG
LCS-4-08	5.3	3.8	8	160	95	27	3	21.5
LCS-4-10	8.4	6.0	10	170	105	34	3	35.6

* Design factor 4:1 for components in accordance with PAS1061.

MOULD COMPONENTS

12.

341 EJECTOR PINS

346 SLEEVE EJECTORS

347 FLAT EJECTORS

348 CORE PINS

349 DOWEL PINS

351 ANGLE GUIDE PINS

352 SOCKET HEAD CAP SCREWS

353 SHOULDER SCREWS

354 SPRING PLUNGERS

355 ISO SPRINGS

358 MOULD CYCLE COUNTER

Ejector Pins, DIN 1530, Type AH - Hardened

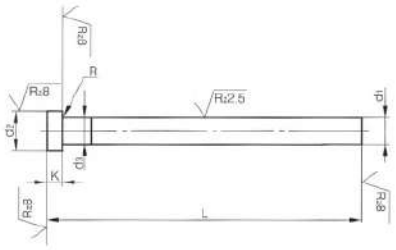

					L 0/+2						
d1 g6	d2 0 -0,2	k 0 -0,05	R +0,2 0	d3	100	125	160	200	250	315	400
1,5	3	1,5	0,2	d1 + 0,03	•	•	•	•			
1,6					•	•	•	•			
2,0	4	2			•	•	•	•	•	•	
2,2					•	•	•	•	•	•	
2,5	5		0,3		•	•	•	•	•	•	
2,7					•	•	•	•	•	•	
3,0	6	3			•	•	•	•	•	•	•
3,2					•	•	•	•	•	•	
3,5	7				•	•	•	•	•	•	
3,7					•	•	•	•	•	•	
4,0	8				•	•	•	•	•	•	•
4,2					•	•	•	•	•	•	•
4,5					•	•	•	•	•	•	•
5,0	10				•	•	•	•	•	•	•
5,2					•	•	•	•	•	•	•
5,5					•	•	•	•	•	•	•
6,0	12	5	0,5		•	•	•	•	•	•	•
6,2					•	•	•	•	•	•	•
6,5					•	•	•	•	•	•	•
7,0					•	•	•	•	•	•	•
8,0	14				•	•	•	•	•	•	•
8,2				d1 + 0,04	•	•	•	•	•	•	•
8,5					•	•	•	•	•	•	•
9,0					•	•	•	•	•	•	•
10,0					•	•	•	•	•	•	•
10,2					•	•	•	•	•	•	•
10,5					•	•	•	•	•	•	•
11,0					•	•	•	•	•	•	•
12,0	20	7	0,8		•	•	•	•	•	•	•
12,2					•	•	•	•	•	•	•
12,5					•	•	•	•	•	•	•
14,0	22				•	•	•	•	•	•	•
16,0					•	•	•	•	•	•	•
18,0	24			d1 + 0,07	•	•	•	•	•	•	•
20,0	26	8	1,0		•	•	•	•	•	•	•

Surface: Hardened and Polished.
Material: 1.2516.
Hardness: 60 ± 2 HRC. Head 45 ± 5 HRC.

Order example
UDSAH+d1+L ex. UDSAH4160 (4x160 mm).

EJECTOR PINS

Ejector Pins, DIN 6751, Type AB - Nitrided

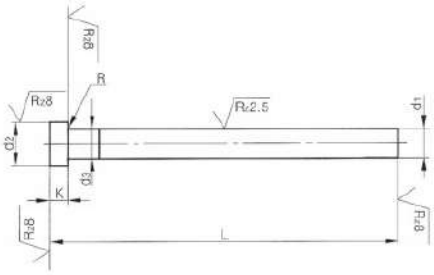

					L 0/+2										
d1 g6	d2 -0,2	k -0,05	R	d3	100	125	160	200	250	315	400	500	630	800	1000
1,5	3	1,5	0,2	d_1 + 0,03	•	•	•	•							
2,0	4	2			•	•	•	•	•						
2,2			0,3		•	•	•	•	•						
2,5	5	3			•	•	•	•	•	•					
3,0	6				•	•	•	•	•	•	•	•			
3,2					•	•	•	•	•	•	•				
3,5	7				•	•	•	•	•	•	•	•			
3,7					•	•	•	•	•	•					
4,0	8				•	•	•	•	•	•	•	•			
4,2					•	•	•	•	•	•	•				
4,5					•	•	•	•	•	•	•				
5,0	10				•	•	•	•	•	•	•	•	•	•	
5,2					•	•	•	•	•	•	•	•			
6,0	12	5	0,5		•	•	•	•	•	•	•	•	•	•	
6,2					•	•	•	•	•	•	•	•			
8,0	14				•	•	•	•	•	•	•	•	•	•	•
8,2				d_1 + 0,04	•	•	•	•	•	•	•	•			
10,0	16				•	•	•	•	•	•	•	•	•	•	•
10,2					•	•	•	•	•	•	•	•			
11,0					•	•	•	•	•	•	•	•			
12,0	20	7	0,8		•	•	•	•	•	•	•	•	•	•	•
12,2					•	•	•	•	•	•	•	•			
12,5					•	•	•	•	•	•	•	•	•		
14,0	22				•	•	•	•	•	•	•	•	•	•	•
16,0					•	•	•	•	•	•	•	•	•	•	•
20,0	26	8	1	d_1 + 0,1		•	•	•	•	•	•	•	•	•	•
25,0	32	10					•	•	•	•	•	•	•	•	•
32,0	40							•	•	•	•	•	•	•	•

Surface: Nitrided and Polished.
Material: 1.2344.
Hardness: 65 ± 2 HRC. Head 45 ± 5 HRC.

Order example
UDSAB + d1 + L ex. UDSAB4160 (4x160 mm).

Ejector Pins, DIN 1530, Type AN - Nitrided

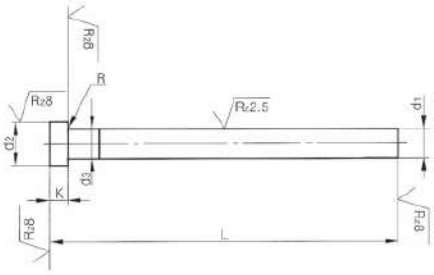

					L 0/+2										
d1 g6	d2 -0,2	k -0,05	R	d3	100	125	160	200	250	315	400	500	630	800	1000
1,5	3	1,5	0,2	d_1 + 0,03	•	•	•	•							
2,0	4	2			•	•	•	•	•						
2,2			0,3		•	•	•	•							
2,5	5	3			•	•	•	•	•	•					
3,0	6				•	•	•	•	•	•	•	•			
3,2					•	•	•	•	•	•	•				
3,5	7				•	•	•	•	•	•	•				
3,7					•	•	•	•	•	•					
4,0	8				•	•	•	•	•	•	•	•			
4,2					•	•	•	•	•	•	•				
4,5					•	•	•	•	•	•	•				
5,0	10				•	•	•	•	•	•	•	•	•	•	
5,2					•	•	•	•	•	•	•	•			
6,0	12	5	0,5		•	•	•	•	•	•	•	•	•	•	
6,2					•	•	•	•	•	•	•	•			
8,0	14				•	•	•	•	•	•	•	•	•	•	•
8,2				d_1 + 0,04	•	•	•	•	•	•	•	•			
10,0	16				•	•	•	•	•	•	•	•	•	•	•
10,2					•	•	•	•	•	•	•	•			
11,0					•	•	•	•	•	•	•	•			
12,0	20	7	0,8		•	•	•	•	•	•	•	•	•	•	•
12,2					•	•	•	•	•	•	•	•			
12,5					•	•	•	•	•	•	•	•	•		
14,0	22				•	•	•	•	•	•	•	•	•	•	•
16,0					•	•	•	•	•	•	•	•	•	•	•
20,0	26	8	1	d_1 + 0,1		•	•	•	•	•	•	•	•	•	•
25,0	32	10					•	•	•	•	•	•	•	•	•
32,0	40						•	•	•	•	•	•	•	•	•

Surface: Bath Nitrided.
Material: 1.2344.
Hardness: 65 ± 2 HRC. Head 45 ± 5 HRC.

Order example
UDSAN + d1 + L ex. UDSAN4160 (4x160 mm).

EJECTOR PINS

Ejector Pins, DIN 1530, Type D - Hardened

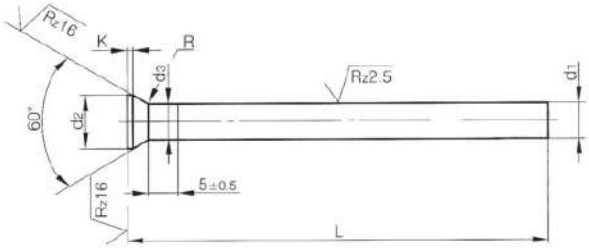

					L 0/+2				
d1 g6	d2-0,2	k -0,05	R 0/+0,2	d3	100	125	160	200	250
1	1,8	0,3	0,3	d_1 + 0,03	•	•	•	•	•
1,2	2				•	•	•	•	•
1,5	2,2				•	•	•	•	•
2	3				•	•	•	•	•
2,2	3,2				•	•	•	•	•
2,5	3,5				•	•	•	•	•
3	4,5				•	•	•	•	•
3,5	5				•	•	•	•	•
4	5,5				•	•	•	•	•
4,5	6				•	•	•	•	•
5	6,5				•	•	•	•	•
5,5	7		0,5		•	•	•	•	•
6	8	0,5			•	•	•	•	•
6,5	9				•	•	•	•	•
7					•	•	•	•	•
7,5	10				•	•	•	•	•
8					•	•	•	•	•
10	12				•	•	•	•	•
12	14				•	•	•	•	•
14	16	0,8	0,8	d_1 + 0,04	•	•	•	•	•
16	18				•	•	•	•	•

Surface: Hardened and Polished.
Material: 1.2516.
Hardness: 60 ± 2 HRC. Head 45 ± 5 HRC.

Order example
UDSD+d1+L ex. UDSD4160 (4x160 mm).

Ejector Pins, DIN 1530, Type CH - Hardened

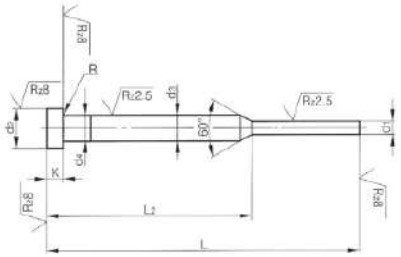

					L1	100	125	160	200
d1 g6	d2 0-0,2	d3 g6	k 0-0,05	R -0,05	L2	50	50	75	75
0,8	4	2	2	0,2		•	•	•	•
0,9	4	2	2	0,2		•	•	•	•
1,0	4	2	2	0,2		•	•	•	•
1,1	4	2	2	0,2		•	•	•	
1,2	4	2	2	0,2		•	•	•	•
1,3	4	2	2	0,2		•	•	•	•
1,4	4	2	2	0,2		•	•	•	•
1,5	6	3	3	0,3		•	•	•	•
1,6	6	3	3	0,3		•	•	•	•
1,7	6	3	3	0,3		•	•	•	•
1,8	6	3	3	0,3		•	•	•	•
1,9	6	3	3	0,3		•	•	•	•
2,0	6	3	3	0,3		•	•	•	•
2,1	6	3	3	0,3		•	•	•	•
2,2	6	3	3	0,3		•	•	•	•
2,3	6	3	3	0,3		•	•	•	•
2,4	6	3	3	0,3		•	•	•	•
2,5	6	3	3	0,3		•	•	•	•

Surface: Hardened and Polished.
Material: 1.2516.
Hardness: 60 ± 2 HRC. Head 45 ± 5 HRC.

Order example
UDSCH+d1+L ex. UDSCH2160 (2x160 mm).

Sleeve Ejectors - Hardened

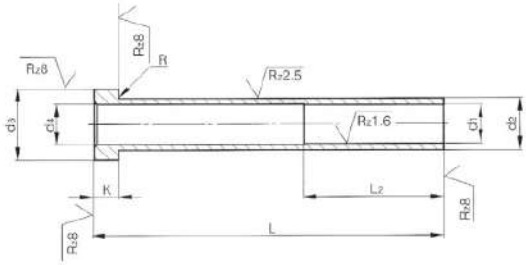

							L 0/+2							
d2 g6	d1 H5	d4	d3 0 -0,2	k 0 -0,05	R +0,2 0	l2 +2 0	75	100	125	150	175	200	225	250
4	2	2,4					•	•	•	•	•	•		
	2,2	2,6	8				•	•	•	•				
5	2,5	2,9				35	•	•	•	•	•	•		
	2,7	3		3	0,3		•	•	•	•	•	•		
	3	3,4	10				•	•	•	•	•	•		
	3,2	3,6					•	•	•	•	•	•		
6	3,5	3,9					•	•	•	•	•	•		
	3,7	4					•	•	•	•	•	•		
	4	4,4	12				•	•	•	•	•	•		
8	4,2	4,6					•	•	•	•	•	•		
	5	5,4		5	0,5		•	•	•	•	•	•		
	5,2	5,6	14			45	•	•	•	•	•	•		
10	6	6,4					•	•	•	•	•	•		
	6,2	6,6					•	•	•	•	•	•	•	•
12	8	8,4	16				•	•	•	•	•	•	•	•
	8,2	8,6					•	•	•	•	•	•	•	•
14	10	10,4	20	7	0,7		•	•	•	•	•	•	•	•
16	12	12,4					•	•	•	•	•	•	•	•

Surface: Hardened and Polished.
Material: 1.2516.
Hardness: 60 ± 2 HRC. Head 45 ± 5 HRC.

Order example
RUD(+d2+d1+L)H ex. RUD64125H (6x4x125mm).

Flat Ejectors - Hardened

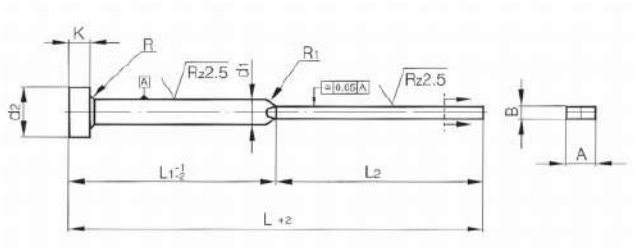

					L	100	125	160	200
					L1	50	65	80	100
d1 g6	A +0 -0,015	B +0 -0,015	d2 +0 -0,2	K -0,05	L2	50	60	80	100
4	3,5	1	8	3		•	•		
4,2	3,8	1	8	3		•	•	•	
4,2	3,8	1,2	8	3		•	•	•	
6	5,5	1,2	12	5		•	•	•	•
6	5,5	1,5	12	5		•	•	•	•
6	5,5	2	12	5		•	•	•	•
8	7,5	1,2	14	5		•	•	•	•
8	7,5	1,5	14	5		•	•	•	•
8	7,5	2	14	5		•	•	•	•

Surface: Hardened and Polished/Grinded.
Material: 1.2516.
Hardness: Skaft 60 ± 2 HRC. Head 45 ± 5 HRC.

Order example
FLU(+B+A+L)H ex. FLU25,5125H (2x5,5x125mm).

Core Pins ISO 6751 Non Hardened (Soft)

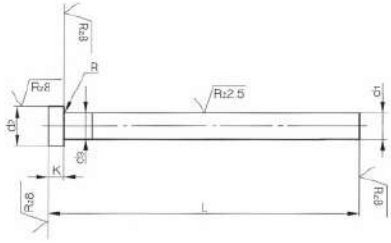

d1 g6	d2-0,2	k-0,05	R	d3	100	125	160	200	250	315
2	4	2	0,2	$d_1 + 0,03$	•	•	•	•		
2,2			0,3		•	•	•			
2,5	5	3			•	•	•			
3	6				•	•	•	•		
3,2					•	•	•	•		
3,5	7				•	•	•	•		
4	8				•	•	•	•		
4,2					•	•	•	•		
4,5					•	•	•	•		
5	10				•	•	•	•	•	
5,2					•	•	•	•		
5,5					•	•	•	•		
6	12	5	0,5		•	•	•	•	•	
6,2					•	•	•	•	•	
6,5					•	•	•	•	•	
7					•	•	•	•	•	
8	14				•	•	•	•	•	•
10				$d_1 + 0,04$	•	•	•	•	•	•
12	20	7			•	•	•	•	•	
16					•	•	•	•	•	•

Surface: Nitrided and Polished.
Material: 1.2344.
Hardness: 40 ± 2 HRC. Head 45 ± 5 HRC.

Order example
UDSAC+d1+L ex. UDSAC4160 (4X160 mm).

Dowel Pins, DIN 6325

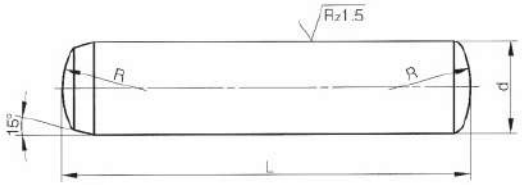

L \ d	2	3	4	5	6	8	10	12	14	16	20
6	•	•									
8	•	•	•	•							
10	•	•	•	•	•						
12	•	•	•	•	•						
14	•	•	•	•	•						
16	•	•	•	•	•	•	•				
18	•	•	•	•	•	•	•				
20	•	•	•	•	•	•	•	•			
24	•	•	•	•	•	•	•	•			
28	•	•	•	•	•	•	•	•			
32	•	•	•	•	•	•	•	•	•	•	
36		•	•	•	•	•	•	•	•	•	
40			•	•	•	•	•	•	•	•	•
45			•	•	•	•	•	•	•	•	•
50			•	•	•	•	•	•	•	•	•
55			•	•	•	•	•	•	•	•	•
60			•	•	•	•	•	•	•	•	•
70				•	•	•	•	•	•	•	•
80				•	•	•	•	•	•	•	•
90					•	•	•	•	•	•	•
100					•	•	•	•	•	•	•
120						•	•	•	•	•	•
130										•	•
140										•	•
150										•	•

Surface: Hardened and Polished.
Material: 1.3505.
Tolerance: m6.
Hardness: 60 ± 2 HRC.

Order example
CYL+d+L ex. CYL532 (5x32mm).

DOWEL PINS

Dowel Pins - Threaded - DIN 7979

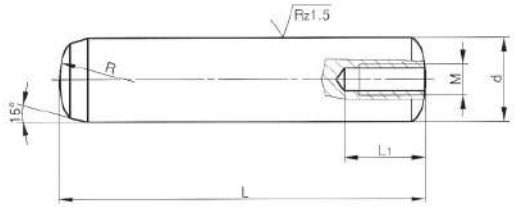

L1	10	12	16	16	20	20	25
L \ d	Ø 6 M4	Ø 8 M5	Ø 10 M6	Ø 12 M6	Ø 14 M8	Ø 16 M8	Ø 20 M10
16	•	•					
18	•	•					
20	•	•	•	•			
24	•	•	•	•			
28	•	•	•	•			
32	•	•	•	•	•	•	
36	•	•	•	•	•	•	
40	•	•	•	•	•	•	•
45	•	•	•	•	•	•	•
50	•	•	•	•	•	•	•
55	•	•	•	•	•	•	•
60	•	•	•	•	•	•	•
70	•	•	•	•	•	•	•
80	•	•	•	•	•	•	•
90	•	•	•	•	•	•	•
100	•	•	•	•	•	•	•
110		•	•	•	•	•	•
120		•	•	•	•	•	•

Surface: Hardened and Polished.
Material: 1.3505.
Tolerance: m6.
Hardness: 60 ± 2 HRC.

Order example
CYLG+d+L ex. CYLG832 (8x32mm).

Angle Guide Pin

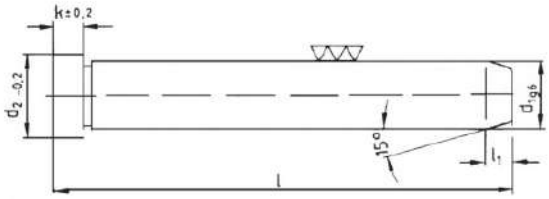

Part No.	d1 x l	d2	l1	k
EOC1040	10 x 40	12	4	3
EOC1060	10 x 60	12	4	3
EOC1080	10 x 80	12	4	3
EOC10100	10 x 100	12	4	3
EOC10120	10 x 120	12	4	3
EOC1260	12 x 60	16	7	6
EOC1280	12 x 80	16	7	6
EOC12100	12 x 100	16	7	6
EOC12120	12 x 120	16	7	6
EOC12140	12 x 140	16	7	6
EOC1460	14 x 60	18	7	8
EOC1480	14 x 80	18	7	8
EOC14100	14 x 100	18	7	8
EOC14120	14 x 120	18	7	8
EOC14140	14 x 140	18	7	8
EOC14160	14 x 160	18	7	8
EOC1680	16 x 80	20	7	8
EOC16100	16 x 100	20	7	8
EOC16120	16 x 120	20	7	8
EOC16140	16 x 140	20	7	8
EOC16160	16 x 160	20	7	8
EOC16180	16 x 180	20	7	8
EOC1860	18 x 60	22	7	8
EOC1880	18 x 80	22	7	8
EOC18100	18 x 100	22	7	8
EOC18120	18 x 120	22	7	8
EOC18140	18 x 140	22	7	8
EOC18160	18 x 160	22	7	8
EOC18200	18 x 200	22	7	8
EOC18240	18 x 240	22	7	8
EOC20100	20 x 100	24	7	8
EOC20120	20 x 120	24	7	8
EOC20160	20 x 160	24	7	8
EOC20200	20 x 200	24	7	8
EOC20240	20 x 240	24	7	8
EOC24100	24 x 100	28	7	15
EOC24120	24 x 120	28	7	15
EOC24140	24 x 140	28	7	15
EOC24160	24 x 160	28	7	15
EOC24200	24 x 200	28	7	15
EOC24240	24 x 240	28	7	15

Surface: Hardened and Polished.
Material: 1.7262.
Tolerance: g6.
Hardness: 60 ± 2 HRC.

SOCKET HEAD CAP SCREWS

Socket Head Cap Screws

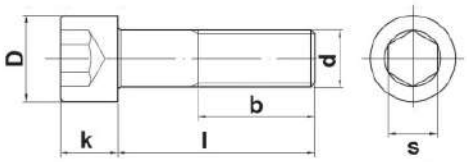

d	M1,6	M2	M2,5	M3	M4	M5	M6	M8	M10	M12	M14	M16	M18	M20	M24
Thread-pitch	0,35	0,40	0,45	0,50	0,70	0,80	1,00	1,25	1,50	1,75	2,00	2,00	2,50	2,50	3,00
D	3	3,8	4,5	5,5	7	8,5	10	13	16	18	21	24	27	30	36
k	1,6	2	2,5	3	4	5	6	8	10	12	14	16	18	20	24
b	15	16	17	18	20	22	24	28	32	36	40	44	48	52	60
s	1,5	1,5	2	2,5	3	4	5	6	8	10	12	14	14	17	19

	Thread Size Metric														
Length	1,6	2	2,5	3	4	5	6	8	10	12	14	16	18	20	24
3		•													
4	•	•													
5		•	•	•	•										
6	•	•	•	•	•	•									
8		•	•	•	•	•	•								
10		•	•	•	•	•	•	•	•						
12		•	•	•	•	•	•	•	•	•					
14				•	•	•	•	•	•	•					
15				•	•	•	•	•	•	•					
16				•	•	•	•	•	•	•					
18					•	•	•	•	•	•					
20				•	•	•	•	•	•	•					
22					•	•	•	•	•	•					
25				•	•	•	•	•	•	•	•	•			
30				•	•	•	•	•	•	•	•	•			
35					•	•	•	•	•	•	•	•	•	•	
40					•	•	•	•	•	•	•	•	•	•	•
45					•	•	•	•	•	•	•	•	•	•	•
50					•	•	•	•	•	•	•	•	•	•	•
55						•	•	•	•	•	•	•	•	•	•
60						•	•	•	•	•	•	•	•	•	•
65						•	•	•	•	•	•	•	•	•	•
70						•	•	•	•	•	•	•	•	•	•
75							•	•	•	•	•	•	•	•	•
80							•	•	•	•	•	•	•	•	•
90							•	•	•	•	•	•	•	•	•
100							•	•	•	•	•	•	•	•	•
110							•	•	•	•	•	•	•	•	•
120							•	•	•	•	•	•	•	•	•
130								•	•	•		•		•	•
140								•	•	•		•		•	•
150								•	•	•		•		•	•
160								•	•	•		•		•	•
180								•	•	•		•		•	•
200								•	•	•		•		•	•

Material: High tensile strength (12.9).
DIN 912/ISO 4762.

Order example
HCS-(Thread Size + (-) + Length) ex. HCS-16-35 (M16x35mm).

Shoulder Screws, ISO 7379

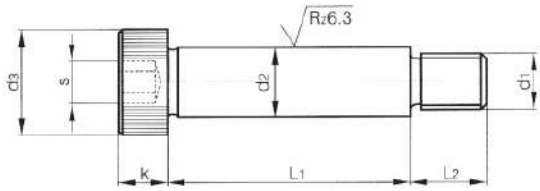

d2h8	6	8	10	12	16	20	24
d1	5 X 0,8	6 X 1	8 X 1,25	10 X 1,5	12 X 1,75	16 X 2	20 X 2,5
d3	10	13	16	18	24	30	36
K	4,5	5,5	7	8	10	14	16
L2	9,5	11	13	16	18	22	27
S	3	4	5	6	8	10	12
Kg/mm	0,68	1,15	3	6	11	28	55

L1	L1 h11						
10	•						
12	•	•					
16	•	•	•				
20	•	•	•	•			
25	•	•	•	•			
30	•	•	•	•	•		
35	•	•	•	•	•		
40	•	•	•	•	•	•	
45	•	•	•	•	•	•	
50	•	•	•	•	•	•	•
55		•	•	•	•	•	•
60		•	•	•	•	•	•
65		•	•	•	•	•	•
70		•	•	•	•	•	•
80			•	•	•	•	•
90				•	•	•	•
100				•	•	•	•
120				•	•	•	•

Material: High tensile strength (12.9).
ISO 7379.

Order example
UNBH + d2 + L1 ex. UNBH610 (6 x 10 mm).

SPRING PLUNGERS

Spring Plunger, Ball Type

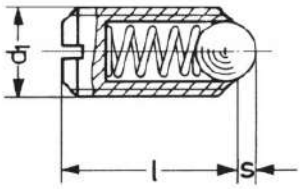

Part No.	d1	l	S	Ball Ø
WZ8087M3	M3	7	0,5	1,5
WZ8087M4	M4	9	0,8	2,5
WZ8087M5	M5	12	0,9	3
WZ8087M6	M6	14	1,0	3,5
WZ8087M8	M8	16	1,5	5
WZ8087M10	M10	19	2,0	6
WZ8087M12	M12	22	2,5	8
WZ8087M16	M16	24	3,5	10

Material: 1.0718.

Spring Plunger, Pin Type

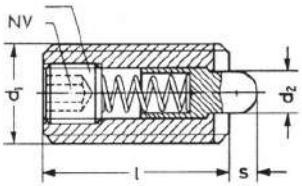

Part No.	d1	l	S	d2	NV
WZ8090M3	M3	12	1	1	0,7
WZ8090M4	M4	15	1,5	1,5	1,3
WZ8090M5	M5	18	2,3	2,4	1,5
WZ8090M6	M6	20	2,5	2,7	2
WZ8090M8	M8	22	3	3,5	2,5
WZ8090M10	M10	22	3	4	3
WZ8090M12	M12	28	4	6	4
WZ8090M16	M16	32	5	7,5	5

Material: 1.0718.

Spring Plunger, Straight

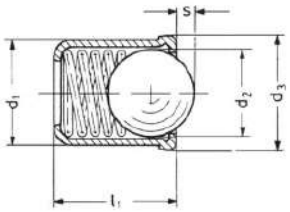

Part No.	d1	l1	S	d2	d3
WZ80934	4	5	0,7	3	4,6
WZ80935	5	6	1	4	5,6
WZ80936	6	7	1,5	5	6,5
WZ80938	8	9	1,8	6,5	8,5

Material: 1.4303.

Die springs ISO 10243 - Steel

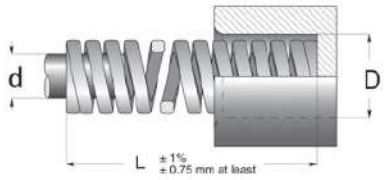

D x L	d	Type V Green	Type B Blue	Type R Red	Type G Yellow
10 x 38	5	•	•	•	•
10 x 44	5	•	•	•	•
10 x 51	5	•	•	•	•
10 x 64	5	•	•	•	•
10 x 76	5	•	•	•	•
10 x 305	5	•	•	•	•
13 x 25	6,3	•	•	•	•
13 x 32	6,3	•	•	•	•
13 x 38	6,3	•	•	•	•
13 x 44	6,3	•	•	•	•
13 x 51	6,3	•	•	•	•
13 x 64	6,3	•	•	•	•
13 x 76	6,3	•	•	•	•
13 x 89	6,3	•	•	•	•
13 x 102	6,3	•	•	•	•
13 x 305	6,3	•	•	•	•
16 x 25	8	•	•	•	•
16 x 32	8	•	•	•	•
16 x 38	8	•	•	•	•
16 x 44	8	•	•	•	•
16 x 51	8	•	•	•	•
16 x 64	8	•	•	•	•
16 x 76	8	•	•	•	•
16 x 89	8	•	•	•	•
16 x 102	8	•	•	•	•
16 x 115	8	•	•	•	•
16 x 305	8	•	•	•	•
20 x 25	10	•	•	•	•
20 x 32	10	•	•	•	•
20 x 38	10	•	•	•	•
20 x 44	10	•	•	•	•
20 x 51	10	•	•	•	•
20 x 64	10	•	•	•	•
20 x 76	10	•	•	•	•
20 x 89	10	•	•	•	•
20 x 102	10	•	•	•	•
20 x 115	10	•	•	•	•
20 x 127	10	•	•	•	•
20 x 139	10	•	•	•	•
20 x 152	10	•	•	•	•
20 x 305	10	•	•	•	•

Order example

Type + Dimension + Length: V10076 (Green ø 10 x 76 mm).
V10305 (Green ø 10 x 305 mm).

ISO SPRINGS

Die springs ISO 10243 - Steel

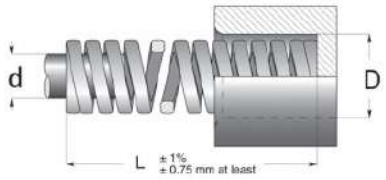

D x L	d	Type V Green	Type B Blue	Type R Red	Type G Yellow
25 x 25	12,5	•	•	•	•
25 x 32	12,5	•	•	•	•
25 x 38	12,5	•	•	•	•
25 x 44	12,5	•	•	•	•
25 x 51	12,5	•	•	•	•
25 x 64	12,5	•	•	•	•
25 x 76	12,5	•	•	•	•
25 x 89	12,5	•	•	•	•
25 x 102	12,5	•	•	•	•
25 x 115	12,5	•	•	•	•
25 x 127	12,5	•	•	•	•
25 x 139	12,5	•	•	•	•
25 x 152	12,5	•	•	•	•
25 x 178	12,5	•	•	•	•
25 x 203	12,5	•	•	•	•
25 x 305	12,5	•	•	•	•
32 x 38	16	•	•	•	•
32 x 44	16	•	•	•	•
32 x 51	16	•	•	•	•
32 x 64	16	•	•	•	•
32 x 76	16	•	•	•	•
32 x 89	16	•	•	•	•
32 x 102	16	•	•	•	•
32 x 115	16	•	•	•	•
32 x 127	16	•	•	•	•
32 x 139	16	•	•	•	•
32 x 152	16	•	•	•	•
32 x 178	16	•	•	•	•
32 x 203	16	•	•	•	•
32 x 254	16	•	•	•	•
32 x 305	16	•	•	•	•

Order example

Type+Dimension+Length: V10076 (Green ø 10 x 76 mm).
V10305 (Green ø 10 x 305 mm).

Die springs ISO 10243 - Steel

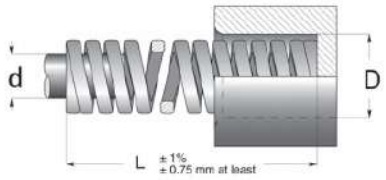

D x L	d	Type V Green	Type B Blue	Type R Red	Type G Yellow
40 x 51	20	•	•	•	•
40 x 64	20	•	•	•	•
40 x 76	20	•	•	•	•
40 x 89	20	•	•	•	•
40 x 102	20	•	•	•	•
40 x 115	20	•	•	•	•
40 x 127	20	•	•	•	•
40 x 139	20	•	•	•	•
40 x 152	20	•	•	•	•
40 x 178	20	•	•	•	•
40 x 203	20	•	•	•	•
40 x 254	20	•	•	•	•
40 x 305	20	•	•	•	•
50 x 64	25	•	•	•	•
50 x 76	25	•	•	•	•
50 x 89	25	•	•	•	•
50 x 102	25	•	•	•	•
50 x 115	25	•	•	•	•
50 x 127	25	•	•	•	•
50 x 139	25	•	•	•	•
50 x 152	25	•	•	•	•
50 x 178	25	•	•	•	•
50 x 203	25	•	•	•	•
50 x 229	25		•		
50 x 254	25	•	•	•	•
50 x 305	25	•	•	•	•
63 x 76	38	•	•	•	•
63 x 89	38	•	•	•	•
63 x 102	38	•	•	•	•
63 x 115	38	•	•	•	•
63 x 127	38	•	•	•	•
63 x 152	38	•	•	•	•
63 x 178	38	•	•	•	•
63 x 203	38	•	•	•	•
63 x 229	38	-	•	-	-
63 x 254	38	•	•	•	•
63 x 305	38	•	•	•	•

Order example
Type + Dimension + Length: V10076 (Green ø 10 x 76 mm).
V10305 (Green ø 10 x 305 mm).

MOULD CYCLE COUNTER

Mould Cycle Counter – Right

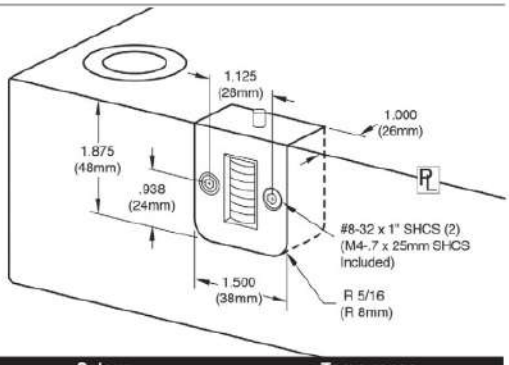

Part No.	Orientation	# digits	Colour	Temp range
CC-200-R-HT	Right (moving half)	7	Black/Red	190°C

Mould Cycle Counter – Left

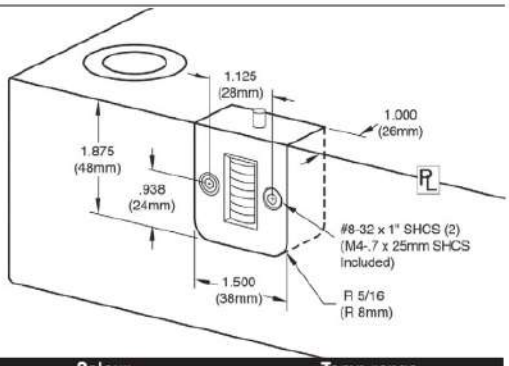

Part No.	Orientation	# digits	Colour	Temp range
CC-200-L-HT	Left (fixed half)	7	Black/Red	190°C

Mouldpro Cycle Counter positively monitors mold activity, validates process monitoring data, and assists mold maintenance procedures.

- Maximum operating temperature is 190°
- Counter: Non-resettable mechanical, 7-digit
- High Temp housing
- Reliable and tested quality
- Specified worldwide by leading OEM's
- Supplied with serial Number
- Socket head cap screws are included

Round Counter - Right Hand

Round Counter - Left Hand

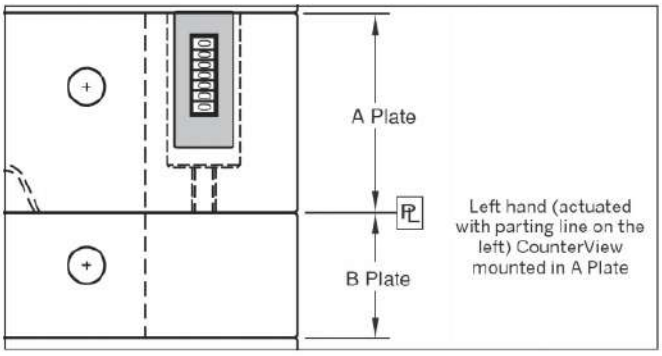

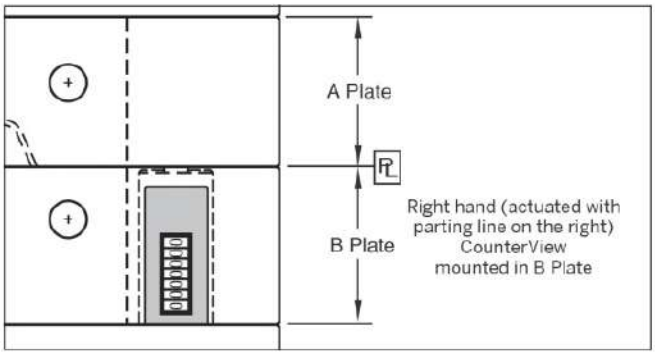

Part No.	Direction	# Digit	Colour	Temp. Range
CR100	Right hand	7	Black	120°C
CL100	Left hand	7	Black	120°C

The Round counters can be installed in the A or B plates with a minimum thickness of 1.875" (47mm). Larger plates utilize a threaded rod (included with each) that is pre-machined to the appropriate length for standard plate thicknesses to provide consistent actuation.

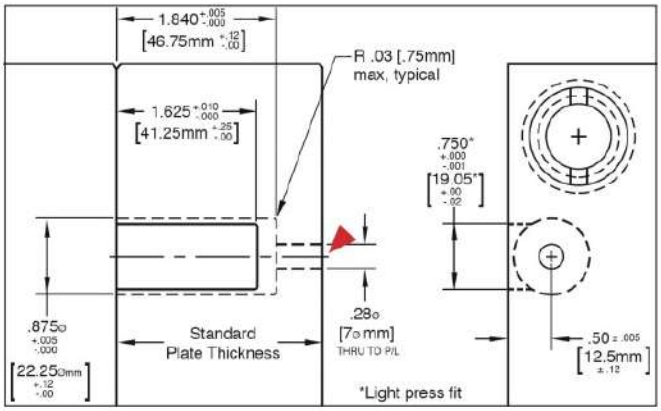

CAD insertion poin

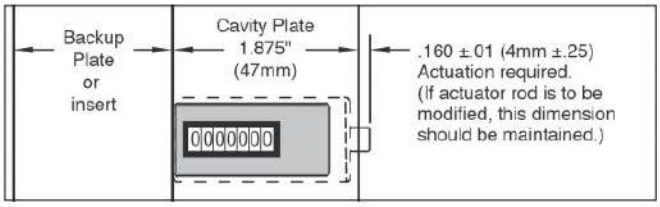

Extension Rods

Part No.	L
CER-56	56
CER-66	66
CER-76	76
CER-96	96
CER-116	116
CER-196	196

L=Length to make plate thickness.

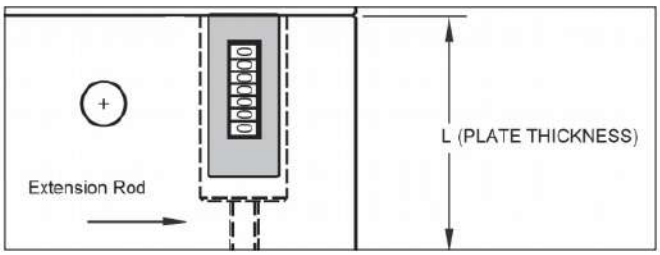

EXPLANATION OF SYMBOLS

	Water
	Oil
°C	Temperature max.
	Only in combination with Push-Lock hose and Push-Lock hosetail
S	TS Safety coupling
	Optional colour clips see page 33

NOTES

Copyright, Disclaimer

Mouldpro ApS makes every effort to maintain the accuracy and quality of the information provided in this Catalogue. However, Mouldpro cannot guarantee and assumes no legal liability or responsibility for the accuracy or completeness of the information provided. The information contained in this catalogue is for general guidance only. You should neither act, nor refrain from action, on the basis of any such information. You should take appropriate professional advice on your particular circumstances because the application of our equipment may vary depending on particular circumstances.

The copyright of all content in this catalogue is owned by Mouldpro and/or the various manufacturers of our equipment. No part of the Mouldpro catalogue may be changed, reproduced, stored in or transmitted on any website or medium without the prior written permission of Mouldpro.

In case of any questions or remarks, feel free to contact us.

CATALOGUE

EDITION 14

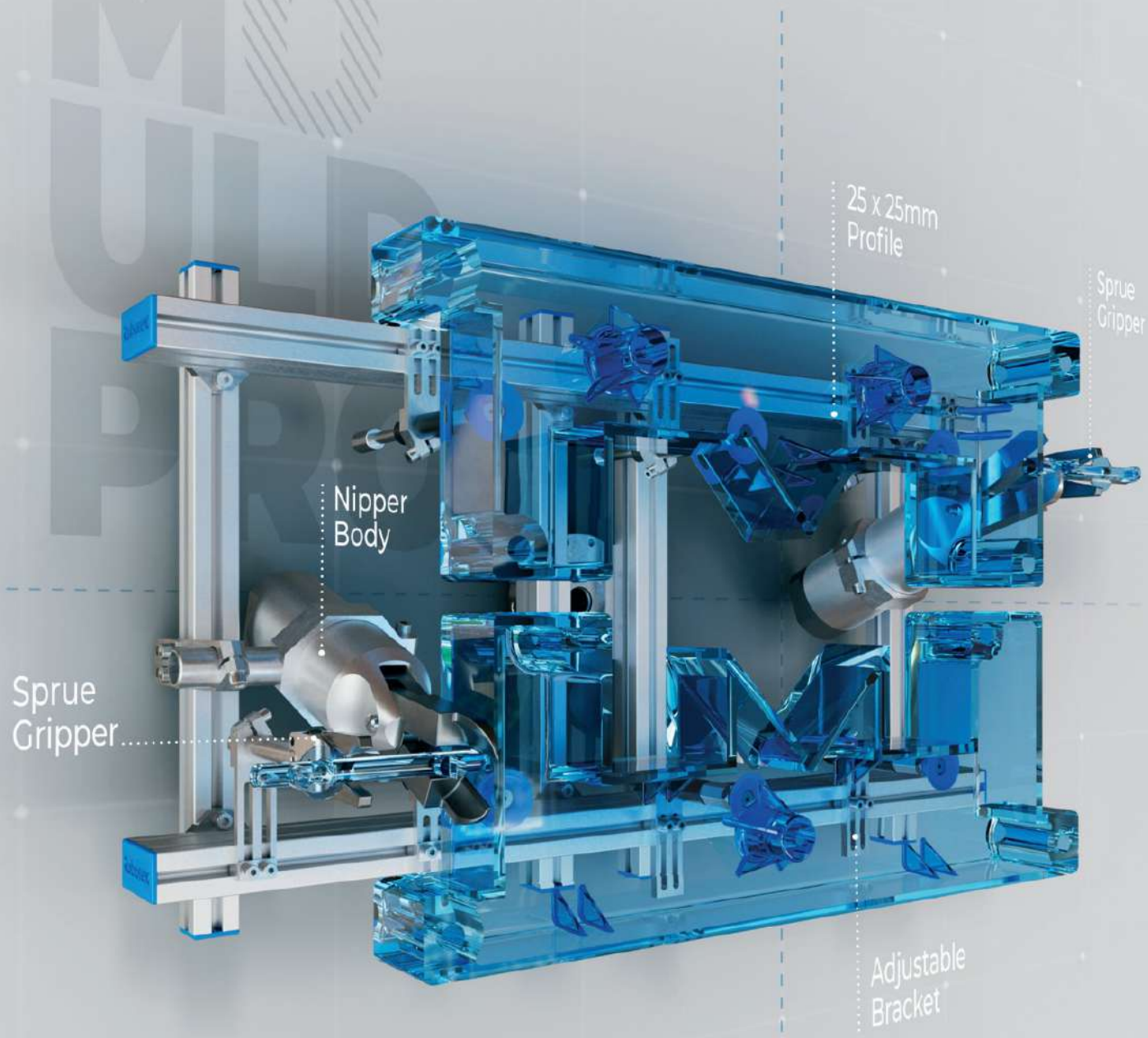

MOULDPRO