ALPA DIGITAL MICROMETERS IP67

MEGAwhiz

ITEM: BA010

Automatic wake-up by moving the thimble, sleeping mode after 20 min. when not in use.
Position memorized in sleeping mode (S.I.S. system), absolute system.
Water protected for heavy work with coolants and lubricants, protection rating IP67 according to IEC 60529, even when connected.
Measuring range 0-102 mm covered by just 3 instruments, set of 3 micrometers available 0-102 mm. Quick measuring cylinder displacement (10 mm / rotation).
Adjustable measuring force 5N/10N (D1111000030), repeatability never achieved before. Thimble made of special material. Proximity cable. Non-rotating spindle.

ON-LINE MANUAL

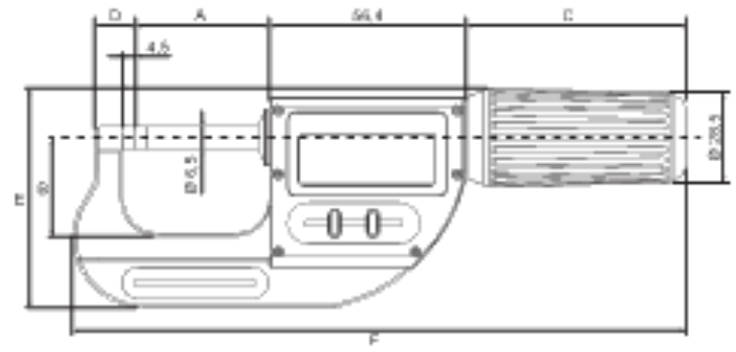

Tech. Code		Measuring range mm	A mm	B mm	C mm	D mm	E mm	F mm
D1111000030		0 ÷ 30	37.3	27.5	68	12.5	63	181
D1111030060		30 ÷ 66	73.3	43	74	13.5	86	230
D1111066102		66 ÷ 102	109.3	60		14.5	106	269

Tech. Code		Model
D99113V		Battery 3V DL2032 - CR2032
D0002USB		Connection cable Proximity-USB
D0002RS232		Proximity -cable RS232

BOWERS DIGITAL MICROMETERS IP67

ITEM: BA015

Resolution 0.001 mm - Automatic wake-up by moving the thimble. Automatic power off. Protection rating IP67. Data transfer via Bluetooth. Displacement of thimble 1 mm / turn.

Tech. Code		Measuring range mm	B mm	C mm	L mm
D1113025		0 ÷ 25	7.5	25	32.5
D1113050		25 ÷ 50	11	37	61
D1113075		50 ÷ 75	11.5	50	86
D1113100		75 ÷ 100	13.5	63	112

Tech. Code		Model
D99113V		Battery 3V DL2032 - CR2032

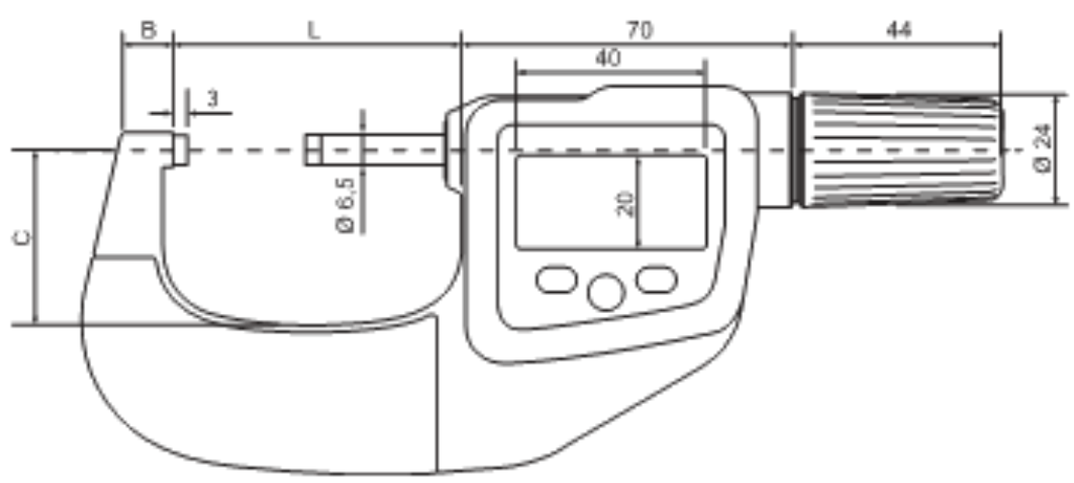

ALPA QUICK FEED DIGITAL MICROMETERS IP65

Exacto

ITEM: BA020

0.001mm resolution - Protection against water splash and particles, equipped with hardened metal contact surfaces.
Ø 6,5 mm spindle, ON/OFF button - zero/ABS - mm/inch

Each rotation is equal to 2mm.

Tech. Code		Measuring range mm	B mm	C mm	D mm	L mm
D1105025		0 ÷ 25	6	25	3	34.5

Tech. Code		Model
D99051,5V		Battery 1.5V SR44

ON-LINE MANUAL

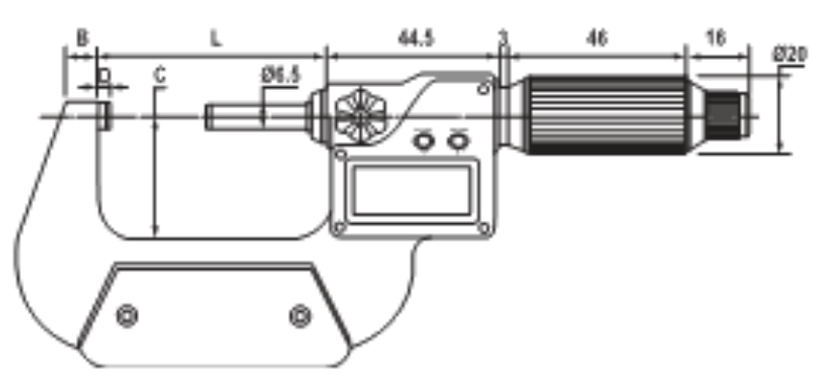

D